Cat. No. I533-E1-04

OMRON

上正科技有限公司
購買、維修 工業電子產品
電話： 037-466333
Email: service@repairtw.com
Line id: @zzzz
www.repairtw.com

USER'S MANUAL

SMARTSTEP A SERIES

MODELS R7M-A□ (Servomotors)
R7D-AP□ (Servo Drivers)

Servomotors/Servo Drivers

Thank you for choosing this SMARTSTEP A-series product. Proper use and handling of the product will ensure proper product performance, will lengthen product life, and may prevent possible accidents.
Please read this manual thoroughly and handle and operate the product with care. Please keep this manual handy for reference after reading it.

1. To ensure safe and proper use of the OMRON Inverters, please read this USER'S MANUAL (Cat. No. I533-E1) to gain sufficient knowledge of the devices, safety information, and precautions before actual use.
2. The products are illustrated without covers and shieldings for closer look in this USER'S MANUAL. For actual use of the products, make sure to use the covers and shieldings as specified.
3. This USER'S MANUAL and other related user's manuals are to be delivered to the actual end users of the products.
4. Please keep this manual close at hand for future reference.
5. If the product has been left unused for a long time, please inquire at our sales representative.

NOTICE

1. This manual describes information about installation, wiring, switch setting, and troubleshooting of the SMARTSTEP A-series Servomotors and Servo Drivers. For information about actual operating procedures using a Parameter Unit, refer to the *SMARTSTEP A Series Operation Manual (I534)*.
2. Be sure that this manual accompanies the product to its final user.
3. Although care has been given in documenting the product, please contact your OMRON representative if you have any suggestions on improving this manual.
4. Assume that anything not specifically described in this manual is not possible.
5. Do not allow the Servomotor or Servo Driver to be wired, set, or operated (from a Parameter Unit) by anyone that is not a profession electrical engineer or the equivalent.
6. We recommend that you add the following precautions to any instruction manuals you prepare for the system into which the product is being installed.
   - Precautions on the dangers of high-voltage equipment.
   - Precautions on touching the terminals of the product even after power has been turned OFF. (These terminals are live even with the power turned OFF.)
7. Specifications and functions may be changed without notice in order to improve product performance.
8. Positive and negative rotation of AC Servomotors described in this manual are defined as looking at the end of the output shaft of the motor as follows: Counterclockwise rotation is positive and clockwise rotation is negative.
9. Do not perform withstand-voltage or other megameter tests on the product. Doing so may damage internal components.
10. Servomotors and Servo Drivers have a finite service life. Be sure to keep replacement products on hand and to consider the operating environment and other conditions affecting the service life.
11. Do not set values for any parameters not described in this manual. Operating errors may result. Consult your OMRON representative if you have questions.
12. Before using the product under conditions which are not described in the manual or applying the product to nuclear control systems, railroad systems, aviation systems, vehicles, combustion systems, medical equipment, amusement machines, safety equipment, and other systems, machines, and equipment that may have a serious influence on lives and property if used improperly, consult your OMRON representative.

上正科技有限公司
購買、維修 此手冊零組件
電話： 037-466333
Email: service@repairtw.com
Line id: @rep
www.repairtw.com

Items to Check Before Unpacking

1. Check the following items before removing the product from the package:
   - Has the correct product been delivered (i.e., the correct model number and specifications)?
   - Has the product been damaged in shipping?
2. Check that the following accessories have been delivered.
   - Safety Precautions

   No connectors or mounting screws are provided. Obtain these separately.

OMRON

上正科技有限公司
購買、維修 專業服務
電話： 037-466333
Email: service@repairtw.com
Line id: @zzzz
www.repairtw.com

USER'S MANUAL

SMARTSTEP A SERIES

MODELS R7M-A□ (Servomotors)

R7D-AP□ (Servo Drivers)

Servomotors/Servo Drivers

上正科技有限公司
購買、維修 此手冊零組件
電話： 037-466333
Email: service@repairtw.com
Line id: @zzzz
www.repairtw.com

Notice:

OMRON products are manufactured for use according to proper procedures by a qualified operator and only for the purposes described in this manual.

The following conventions are used to indicate and classify precautions in this manual. Always heed the information provided with them. Failure to heed precautions can result in injury to people or damage to property.

⚠ DANGER Indicates an imminently hazardous situation which, if not avoided, will result in death or serious injury. Additionally, there may be severe property damage.

⚠ WARNING Indicates a potentially hazardous situation which, if not avoided, could result in death or serious injury. Additionally, there may be severe property damage.

⚠ Caution Indicates a potentially hazardous situation which, if not avoided, may result in minor or moderate injury, or property damage.

OMRON Product References

All OMRON products are capitalized in this manual. The word “Unit” is also capitalized when it refers to an OMRON product, regardless of whether or not it appears in the proper name of the product.

The abbreviation “Ch,” which appears in some displays and on some OMRON products, often means “word” and is abbreviated “Wd” in documentation in this sense.

The abbreviation “PC” means Programmable Controller and is not used as an abbreviation for anything else.

上正科技有限公司
購買、維修 此手冊零組件
電話 037-466333
Email: service@repairtw.com
Line id: @zzzz
www.repairtw.com

Visual Aids

The following headings appear in the left column of the manual to help you locate different types of information.

Note Indicates information of particular interest for efficient and convenient operation of the product.

© **OMRON, 2001**

All rights reserved. No part of this publication may be reproduced, stored in a retrieval system, or transmitted, in any form, or by any means, mechanical, electronic, photocopying, recording, or otherwise, without the prior written permission of OMRON.

No patent liability is assumed with respect to the use of the information contained herein. Moreover, because OMRON is constantly striving to improve its high-quality products, the information contained in this manual is subject to change without notice. Every precaution has been taken in the preparation of this manual. Nevertheless, OMRON assumes no responsibility for errors or omissions. Neither is any liability assumed for damages resulting from the use of the information contained in this publication.

上正科技有限公司
購買、維修 此手冊零組件
電話： 037-466333
Email: service@repairtw.com
Line id: @zzzz
www.repairtw.com

General Warnings

Observe the following warnings when using the SMARTSTEP Servomotor and Servo Driver and all connected or peripheral devices.

This manual may include illustrations of the product with protective covers removed in order to describe the components of the product in detail. Make sure that these protective covers are on the product before use.

Consult your OMRON representative when using the product after a long period of storage.

⚠ **WARNING** Always connect the frame ground terminals of the Servo Driver and the Servomotor to a class-3 ground (to 100 Ω or less). Not connecting to a class-3 ground may result in electric shock.

⚠ **WARNING** Do not touch the inside of the Servo Driver. Doing so may result in electric shock.

⚠ **WARNING** Do not remove the front cover, terminal covers, cables, or optional items while the power is being supplied. Doing so may result in electric shock.

⚠ **WARNING** Installation, operation, maintenance, or inspection must be performed by authorized personnel. Not doing so may result in electric shock or injury.

上立科技有限公司
購買、維修 此手冊零組件
電話: 037-466333
Email: service@repairtw.com
Line id: @ezis
www.repairtw.com

⚠ **WARNING** Wiring or inspection must not be performed for at least five minutes after turning OFF the power supply. Doing so may result in electric shock.

⚠ **WARNING** Do not damage, press, or put excessive stress or heavy objects on the cables. Doing so may result in electric shock.

⚠ **WARNING** Do not touch the rotating parts of the Servomotor in operation. Doing so may result in injury.

⚠ **WARNING** Do not modify the product. Doing so may result in injury or damage to the product.

⚠ **WARNING** Provide a stopping mechanism on the machine to ensure safety. The holding brake is not designed as a stopping mechanism for safety purposes.

⚠ **WARNING** Provide an external emergency stopping mechanism that can stop operation and shutting off the power supply immediately. Not doing so may result in injury.

⚠ **WARNING** Do not come close to the machine immediately after resetting momentary power interruption to avoid an unexpected restart. (Take appropriate measures to secure safety against an unexpected restart.) Doing so may result in injury.

⚠ **Caution** Use the Servomotors and Servo Drivers in a specified combination. Using them incorrectly may result in fire or damage to the products.

⚠ **Caution** Do not store or install the product in the following places. Doing so may result in fire, electric shock, or damage to the product.

- Locations subject to direct sunlight.
- Locations subject to temperatures or humidity outside the range specified in the specifications.
- Locations subject to condensation as the result of severe changes in temperature.
- Locations subject to corrosive or flammable gases.
- Locations subject to dust (especially iron dust) or salts.
- Locations subject to shock or vibration.
- Locations subject to exposure to water, oil, or chemicals.

⚠ **Caution** Do not touch the Servo Driver radiator, Servo Driver regeneration resistor, or Servomotor while the power is being supplied or soon after the power is turned OFF. Doing so may result in a skin burn due to the hot surface.

Storage and Transportation Precautions

上正科技有限公司
購買、維修、出售四零組件
電話： 037-466333
Email: service@repairtw.com
Line id: @zzzz
http://www.repairtw.com

⚠ **Caution** Do not hold the product by the cables or motor shaft while transporting it. Doing so may result in injury or malfunction.

⚠ **Caution** Do not place any load exceeding the figure indicated on the product. Doing so may result in injury or malfunction.

Installation and Wiring Precautions

⚠ **Caution** Do not step on or place a heavy object on the product. Doing so may result in injury.

⚠ **Caution** Do not cover the inlet or outlet ports and prevent any foreign objects from entering the product. Doing so may result in fire.

⚠ **Caution** Be sure to install the product in the correct direction. Not doing so may result in malfunction.

⚠ **Caution** Provide the specified clearances between the Servo Driver and the control panel or with other devices. Not doing so may result in fire or malfunction.

⚠ **Caution** Do not apply any strong impact. Doing so may result in malfunction.

⚠ **Caution** Be sure to wire correctly and securely. Not doing so may result in motor runaway, injury, or malfunction.

⚠ **Caution** Be sure that all the mounting screws, terminal screws, and cable connector screws are tightened to the torque specified in the relevant manuals. Incorrect tightening torque may result in malfunction.

⚠ **Caution** Use crimp terminals for wiring. Do not connect bare stranded wires directly to terminals. Connection of bare stranded wires may result in burning.

⚠ **Caution** Always use the power supply voltage specified in the User's Manual. An incorrect voltage may result in malfunction or burning.

⚠ **Caution** Take appropriate measures to ensure that the specified power with the rated voltage and frequency is supplied. Be particularly careful in places where the power supply is unstable. An incorrect power supply may result in malfunction.

⚠ **Caution** Install external breakers and take other safety measures against short-circuiting in external wiring. Insufficient safety measures against short-circuiting may result in burning.

⚠ **Caution** Take appropriate and sufficient countermeasures when installing systems in the following locations. Failure to do so may result in damage to the product.

- Locations subject to static electricity or other forms of noise.
- Locations subject to strong electromagnetic fields and magnetic fields.
- Locations subject to possible exposure to radioactivity.
- Locations close to power supplies.

上立科技有限公司
購買、維修、出售四零組件
電話: 0974 [illegible]
Email: service@repairtw.com
Line id: @zzzz
www.repairtw.com

Operation and Adjustment Precautions

⚠ **Caution** Confirm that no adverse effects will occur in the system before performing the test operation. Not doing so may result in equipment damage.

⚠ **Caution** Check the newly set parameters and switches for proper execution before actually running them. Not doing so may result in equipment damage.

⚠ **Caution** Do not make any extreme adjustments or setting changes. Doing so may result in unstable operation and injury.

⚠ **Caution** Separate the Servomotor from the machine, check for proper operation, and then connect to the machine. Not doing so may cause injury.

⚠ **Caution** When an alarm occurs, remove the cause, reset the alarm after confirming safety, and then resume operation. Not doing so may result in injury.

⚠ **Caution** Do not use the built-in brake of the Servomotor for ordinary braking. Doing so may result in malfunction.

Maintenance and Inspection Precautions

⚠ **WARNING** Do not attempt to disassemble, repair, or modify any Units. Any attempt to do so may result in malfunction, fire, or electric shock.

⚠ **Caution** Resume operation only after transferring to the new Unit the contents of the data required for operation. Not doing so may result in an unexpected operation.

上正科技有限公司
購買、維修 此手冊零組件
電話： 037-466333
Email: service@repairtw.com
Line id: @zzzz
www.repairtw.com

Warning Labels

Warning labels are pasted on the product as shown in the following illustration. Be sure to follow the instructions given there.

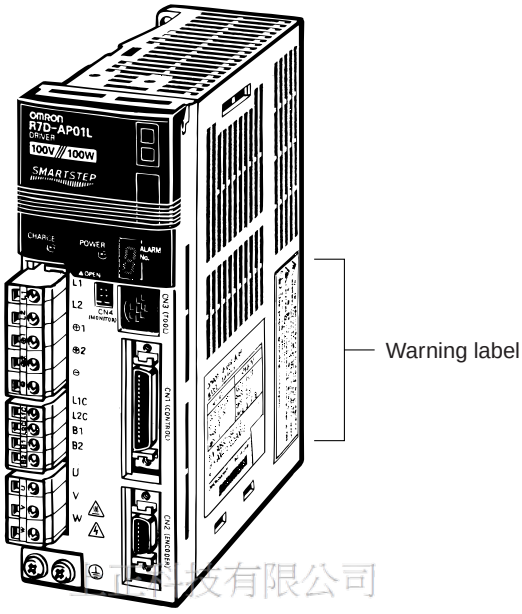

Example from R7D-AP01L

Example from R7D-AP01L

有限公司
購買、維修、此手冊零組件
電話：+886-037-466333
Email: sales@repairtw.com
www.repairtw.com

上正科技有限公司
購買、維修 此手冊零組件
電話： 037-466333
Email: service@repairtw.com
Line id: @zzzz
www.repairtw.com

Read and Understand this Manual

Please read and understand this manual before using the product. Please consult your OMRON representative if you have any questions or comments.

Warranty and Limitations of Liability

WARRANTY
OMRON's exclusive warranty is that the products are free from defects in materials and workmanship for a period of one year (or other period if specified) from date of sale by OMRON. OMRON MAKES NO WARRANTY OR REPRESENTATION, EXPRESS OR IMPLIED, REGARDING NON-INFRINGEMENT, MERCHANTABILITY, OR FITNESS FOR PARTICULAR PURPOSE OF THE PRODUCTS. ANY BUYER OR USER ACKNOWLEDGES THAT THE BUYER OR USER ALONE HAS DETERMINED THAT THE PRODUCTS WILL SUITABLY MEET THE REQUIREMENTS OF THEIR INTENDED USE. OMRON DISCLAIMS ALL OTHER WARRANTIES, EXPRESS OR IMPLIED.

LIMITATIONS OF LIABILITY
OMRON SHALL NOT BE RESPONSIBLE FOR SPECIAL, INDIRECT, OR CONSEQUENTIAL DAMAGES, LOSS OF PROFITS OR COMMERCIAL LOSS IN ANY WAY CONNECTED WITH THE PRODUCTS, WHETHER SUCH CLAIM IS BASED ON CONTRACT, WARRANTY, NEGLIGENCE, OR STRICT LIABILITY. In no event shall the responsibility of OMRON for any act exceed the individual price of the product on which liability is asserted. IN NO EVENT SHALL OMRON BE RESPONSIBLE FOR WARRANTY, REPAIR, OR OTHER CLAIMS REGARDING THE PRODUCTS UNLESS OMRON'S ANALYSIS CONFIRMS THAT THE PRODUCTS WERE PROPERLY HANDLED, STORED, INSTALLED, AND MAINTAINED AND NOT SUBJECT TO CONTAMINATION, ABUSE, MISUSE, OR INAPPROPRIATE MODIFICATION OR REPAIR.

上正科技有限公司
購買、維修、出租、銷售
電話： 037-466333
Email: service@repairtw.com
Line id: @zzzz
www.repairtw.com

Application Considerations

SUITABILITY FOR USE

OMRON shall not be responsible for conformity with any standards, codes, or regulations that apply to the combination of products in the customer's application or use of the products.

At the customer's request, OMRON will provide applicable third party certification documents identifying ratings and limitations of use that apply to the products. This information by itself is not sufficient for a complete determination of the suitability of the products in combination with the end product, machine, system, or other application or use.

The following are some examples of applications for which particular attention must be given. This is not intended to be an exhaustive list of all possible uses of the products, nor is it intended to imply that the uses listed may be suitable for the products:

- Outdoor use, uses involving potential chemical contamination or electrical interference, or conditions or uses not described in this manual.
- Nuclear energy control systems, combustion systems, railroad systems, aviation systems, medical equipment, amusement machines, vehicles, safety equipment, and installations subject to separate industry or government regulations.
- Systems, machines, and equipment that could present a risk to life or property.

Please know and observe all prohibitions of use applicable to the products.

NEVER USE THE PRODUCTS FOR AN APPLICATION INVOLVING SERIOUS RISK TO LIFE OR PROPERTY WITHOUT ENSURING THAT THE SYSTEM AS A WHOLE HAS BEEN DESIGNED TO ADDRESS THE RISKS, AND THAT THE OMRON PRODUCTS ARE PROPERLY RATED AND INSTALLED FOR THE INTENDED USE WITHIN THE OVERALL EQUIPMENT OR SYSTEM.

上正科技有限公司
精密電子維修專業廠商
電話： 037-466333
Email: service@repairtw.com
Line id: @zzzz
www.repairtw.com

PROGRAMMABLE PRODUCTS

OMRON shall not be responsible for the user's programming of a programmable product, or any consequence thereof.

Disclaimers

CHANGE IN SPECIFICATIONS

Product specifications and accessories may be changed at any time based on improvements and other reasons.

It is our practice to change model numbers when published ratings or features are changed, or when significant construction changes are made. However, some specifications of the products may be changed without any notice. When in doubt, special model numbers may be assigned to fix or establish key specifications for your application on your request. Please consult with your OMRON representative at any time to confirm actual specifications of purchased products.

DIMENSIONS AND WEIGHTS

Dimensions and weights are nominal and are not to be used for manufacturing purposes, even when tolerances are shown.

PERFORMANCE DATA

Performance data given in this manual is provided as a guide for the user in determining suitability and does not constitute a warranty. It may represent the result of OMRON's test conditions, and the users must correlate it to actual application requirements. Actual performance is subject to the OMRON Warranty and Limitations of Liability.

上立科技有限公司
購買、維修、出租專業廠商
電話： 037-462333
Email: service@repairtw.com
Line id: @zzzz
www.repairtw.com

ERRORS AND OMISSIONS

The information in this manual has been carefully checked and is believed to be accurate; however, no responsibility is assumed for clerical, typographical, or proofreading errors, or omissions.

上正科技有限公司
購買、維修 此手冊零組件
電話： 037-466333
Email: service@repairtw.com
Line id: @zzzz
www.repairtw.com

Table of Contents

Chapter 1. Introduction. 1-1

1-1 Features. 1-2
1-2 System Configuration 1-4
1-3 Servo Driver Nomenclature 1-5
1-4 Applicable Standards 1-6
1-5 System Block Diagrams 1-7

Chapter 2. Standard Models and Specifications. 2-1

2-1 Standard Models 2-2
2-2 External and Mounted Dimensions 2-6
2-3 Servo Driver Specifications 2-17
2-4 Servomotor Specifications 2-31
2-5 Reduction Gear Specifications 2-39
2-6 Cable and Connector Specifications. 2-43
2-7 Servo Relay Units and Cable Specifications 2-58
2-8 Parameter Unit Specifications 2-111
2-9 External Regeneration Resistor Specifications. 2-113
2-10 DC Reactors 2-114

Chapter 3. System Design and Installation 3-1

3-1 Installation Conditions 3-3
3-2 Wiring. 3-8
3-3 Regenerative Energy Absorption 3-37

Chapter 4. Operation. 4-1

4-1 Operational Procedure 4-3
4-2 Switch Settings 4-4
4-3 Preparing for Operation 4-7
4-4 Trial Operation 4-9
4-5 Gain Adjustments 4-11
4-6 User Parameters 4-15
4-7 Operating Functions 4-26

Chapter 5. Troubleshooting 5-1

5-1 Measures when Trouble Occurs 5-2
5-2 Alarms 5-5
5-3 Troubleshooting 5-7
5-4 Overload Characteristics (Electron Thermal Characteristics) 5-15
5-5 Periodic Maintenance 5-16

Chapter 6. Appendix 6-1

6-1 Connection Examples. 6-2

Revision History. R-1

上可科技有限公司
購買、維修、此手冊零組件
電話： 037-466333
Email: service@repairtw.com
Line id: @zzzz
www.repairtw.com

上正科技有限公司
購買、維修 此手冊零組件
電話： 037-466333
Email: service@repairtw.com
Line id: @zzzz
www.repairtw.com

上正科技有限公司
購買、維修 此手冊零組件
電話： 037-466333
Email: service@repairtw.com
Line id: @kzzz
www.repairtw.com

Chapter 1

Introduction

1-1 Features
1-2 System Configuration
1-3 Servo Driver Nomenclature
1-4 Applicable Standards
1-5 System Block Diagrams

1-1 Features

The SMARTSTEP A-series Servomotors and Servo Drivers have been developed as pulse string input-type Position Controllers to replace stepping motors in simple positioning systems. The SMARTSTEP A-series Servomotors and Servo Drivers combine the stepping motor's ease of use with faster positioning resulting from high speed and high torque, higher reliability with no loss of positioning accuracy even during sudden load changes, and other advanced features.

■ Faster Response and Rotation Speed

SMARTSTEP A-series Servomotors and Servo Drivers incorporate the same high-speed and high-torque features, unachievable with stepping motors, as the OMNUC W Series. The SMARTSTEP A-series Servomotors provide faster rotation speeds of up to 4,500 r/min, with constant operation possible at this speed. Faster output torque of up to 1 s can output up to approximately 300% of the rated torque, providing even faster middle- and long-stroke positioning.

■ Constant Accuracy

The A-series product line's higher encoder resolution of 2,000 pulses/rotation provides feedback control enabling continuous operation without loss of positioning accuracy, even with sudden load changes or sudden acceleration or deceleration.

上正科技有限公司
購買、維修 此手冊零組件
電話： 037-466333
Email: service@repairtw.com
Line id: @zzzz
www.repairtw.com

■ Minimal Setting with Servo Driver Front Panel Switches

The SMARTSTEP A Series can be operated immediately without time-consuming parameter setting. The A-series Servo Drivers' front panel switches enable easier alteration of function or positioning resolution settings.

● Resolution Settings

SMARTSTEP A-series Servomotor resolution can be selected from the following four levels: 500 pulses/rotation (0.72°/step); 1,000 pulses/rotation (0.36°/step) (default setting); 5,000 pulses/rotation (0.072°/step); or 10,000 pulses/rotation (0.036°/step)

● Command Pulse Input Setting

SMARTSTEP A-series command pulse input setting can be switched between CW/CCW (2-pulse) and SIGN/PULS (single-pulse) methods to easily adapt to Position Controller output specifications.

● Dynamic Brake Setting

SMARTSTEP A-series Servomotors can be forcibly decelerated to a stop at RUN OFF or when an alarm occurs.

● Gain Setting

A special rotary switch on SMARSTEP A-series Servo Drivers enables easy gain setting. Online autotuning can also be activated with the flick of a switch, and responsiveness can be easily matched to the machinery to be used.

Note Using a Parameter Unit or personal computer enables operation with parameter settings.

■ Cylinder-style and Flat-style Servomotors

The SMARTSTEP A Series offers Flanged Cylinder-style Servomotors, with a smaller mounting area, and Flat-style Servomotors, with a shorter overall length. The Flat Servomotor depth dimensions are approximately the same as those of stepping motors of the same output capacity. Servomotors can be selected by size, thereby making equipment more compact.

■ A Wider Selection of Programming Devices

Special SMARTSTEP A-series Parameter Units and personal computer monitoring software are available. The special monitoring software enables performing parameter setting, speed and current monitoring, speed and current waveform displays, I/O monitoring, autotuning, jogging, and other operations from a computer. It is also possible to perform multiple-axis communications that set the parameters and monitor operations for multiple Servo Drivers. For details, refer to the *Servo Driver Personal Computer Monitor Software (CD-ROM) for Windows 95/98, Version 2.0 (WMON Win Ver.2.0)* (Catalog No.: SBCE-011).

上正科技有限公司
購買、維修 此手冊零組件
電話： 037-466333
Email: service@repairtw.com
Line id: @zzzz
www.repairtw.com

1-2 System Configuration

SYSMAC + Position Control Unit with pulse string output

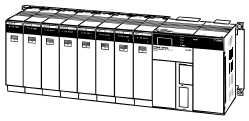

SYSMAC CJ/CS/C/CV
Programmable Controller

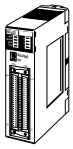

Position Control Units
CJ1W-NC113/213/413
CJ1W-NC133/233/433
CS1W-NC113/213/413
CS1W-NC133/233/433
C200HW-NC113/213/413
C500-NC113/211

SYSMAC Programmable Controllers with pulse outputs

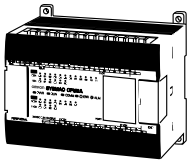

SYSMAC CPM2A

SYSMAC CPM2C

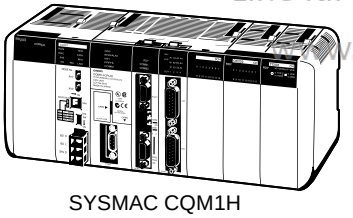

SYSMAC CQM1H

Single-shaft Positioner with pulse string output

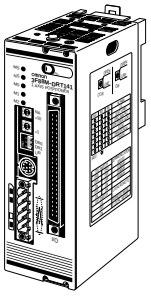

3F88M-DRT141 Single-shaft
Positioner for DeviceNet

Pulse String

R7A-PR02A Parameter Unit
(Hand-held)

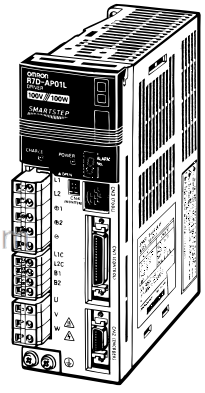

SMARTSTEP A-series
R7D-AP□ Servo Driver

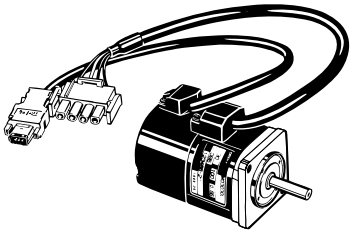

SMARTSTEP A-series
R7M-A□ Servomotor

科技有限公司
購買 維修 此手冊零組件
電話: 037-466333
Email: service@repairtw.com
Line id: @zzzz
www.repairtw.com

1-3 Servo Driver Nomenclature

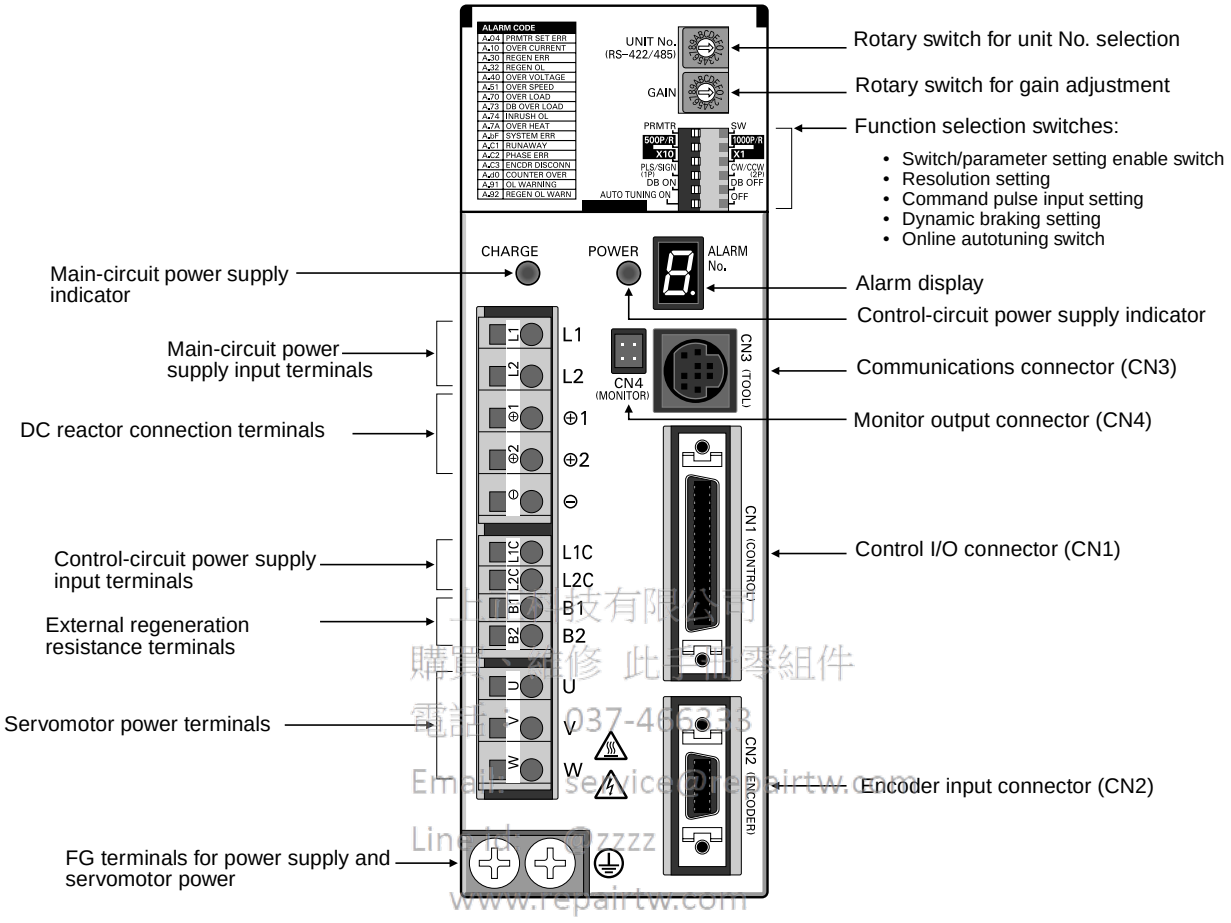

上揚科技有限公司
購買 維修 此手冊零組件
電話：037-463-3
Email: service@repairtw.com
Line id: @zzzz
www.repairtw.com

1-4 Applicable Standards

■ EC Directives

EC Directives	Product	Applicable standards	Remarks
Low Voltage Directive	AC Servo Drivers	EN50178	Safety requirements for electrical devices for measurement, control, and research facilities
	AC Servomotors	IEC60034-1, -5, -8, -9 EN60034-1, -9	Rotating electrical equipment
EMC Directives	AC Servo Drivers and AC Servomotors	EN55011 class A group 1	Wireless interference and measurement methods for radio-frequency devices for industry, science, and medical application
		EN61000-6-2	Electromagnetic compatibility and immunity standards for industrial environments

Note Installation under the conditions stipulated in *3-2-5 EMC-compatible Wiring* must be met to ensure conformance to EMC Directives.

上正科技有限公司
購買、維修 此手冊零組件
電話: 037-466333
Email: service@repairtw.com
Line Id: @2222
www.repairtw.com

■ UL and cUL Standards

Standards	Product	Applicable standards	File No.	Remarks
UL	AC Servo Drivers	UL508C	E179149	Power conversion devices
	AC Servomotors	UL1004	E179189	Electric motors
cUL	AC Servo Drivers	cUL C22.2 No. 14	E179149	Industrial control devices
	AC Servomotors	cUL C22.2 No. 100	E179189	Motors and generators

1-5 System Block Diagrams

■ 100 V AC: R7D-APA3L/-APA5L/-AP01L/-AP02L/-AP04L

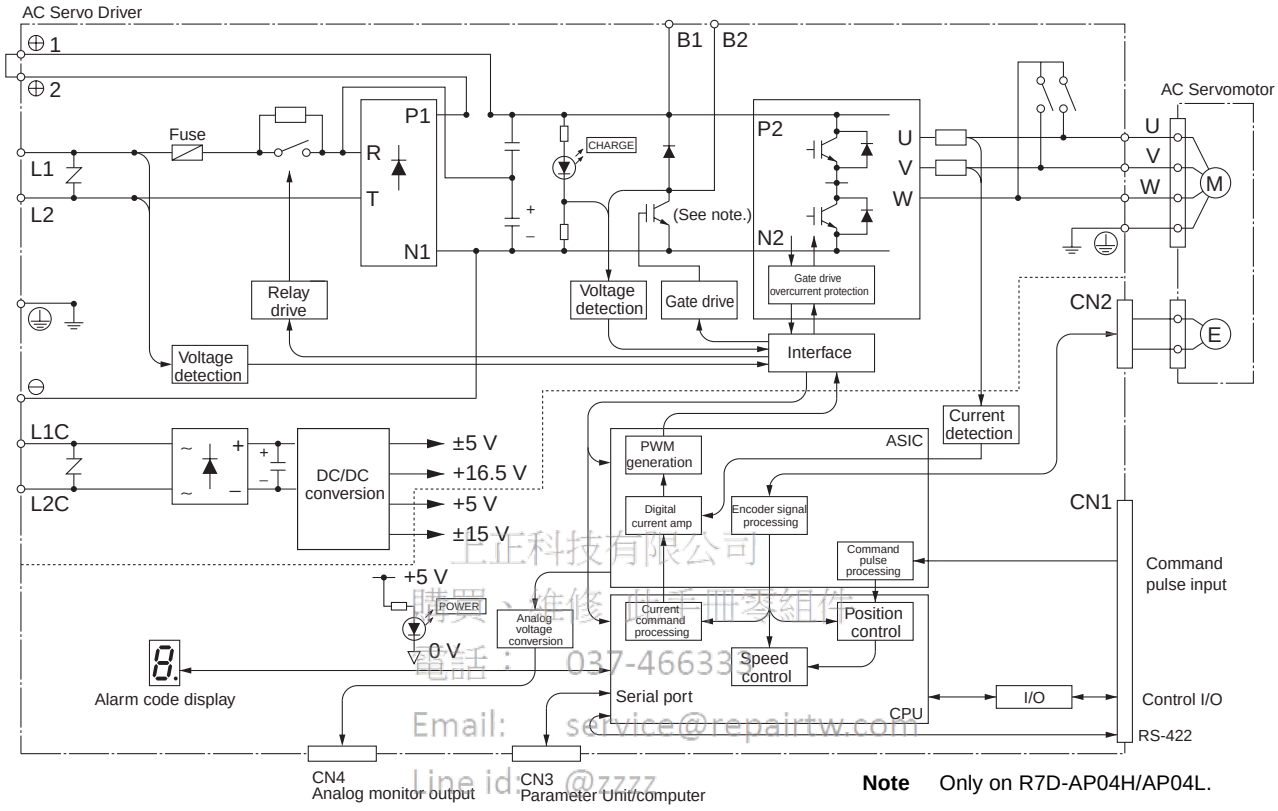

Note Only on R7D-AP04H/AP04L.

上正科技有限公司
購買、維修、整手冊零組件
電話：037-466332
Email: service@repairtw.com
Line id: @zzzz
www.repairtw.com

■ 200 V AC: R7D-APA3H/-APA5H/-AP01H/-AP02H/-AP04H

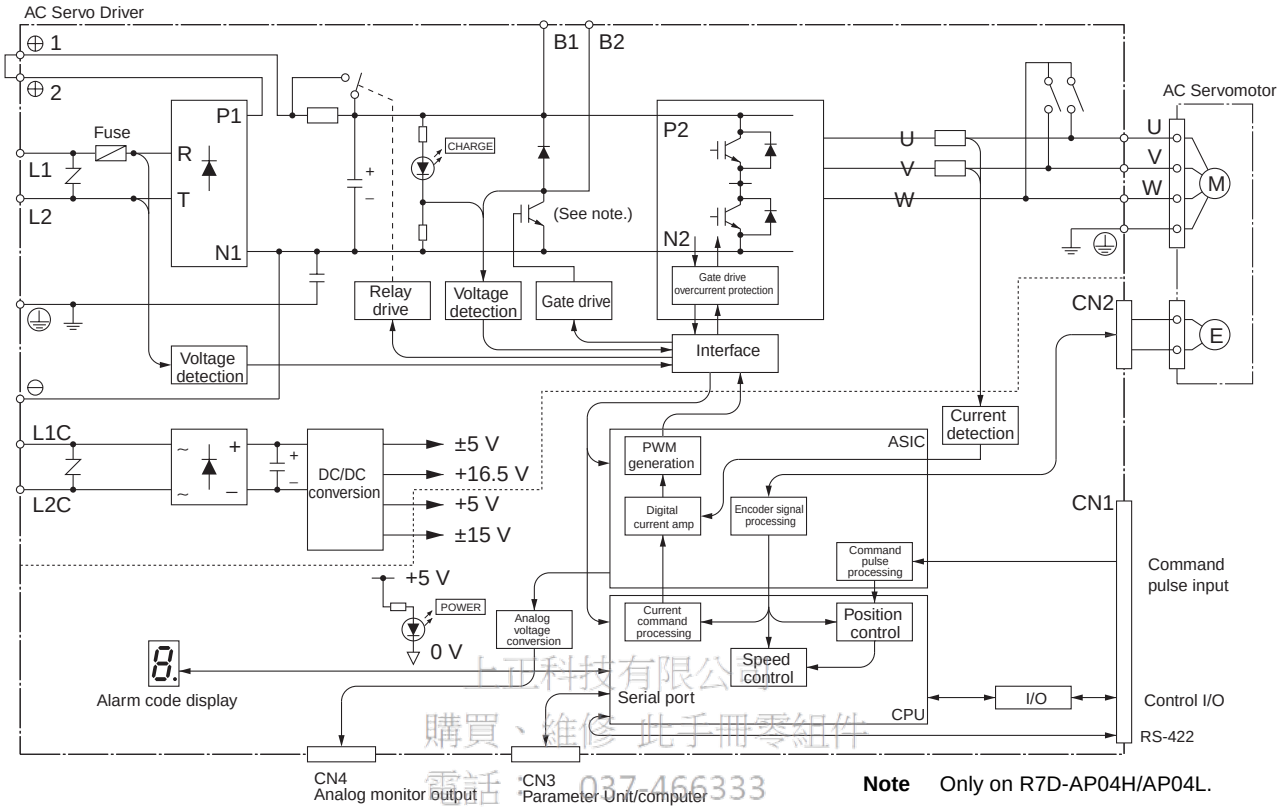

Note Only on R7D-AP04H/AP04L.

上立科技有限公司
購買、維修 此手冊零組件
電話: 037-466333
Email: service@repairtw.com
Line id: @zzzz
www.repairtw.com

■ 200 V AC: R7D-AP08H

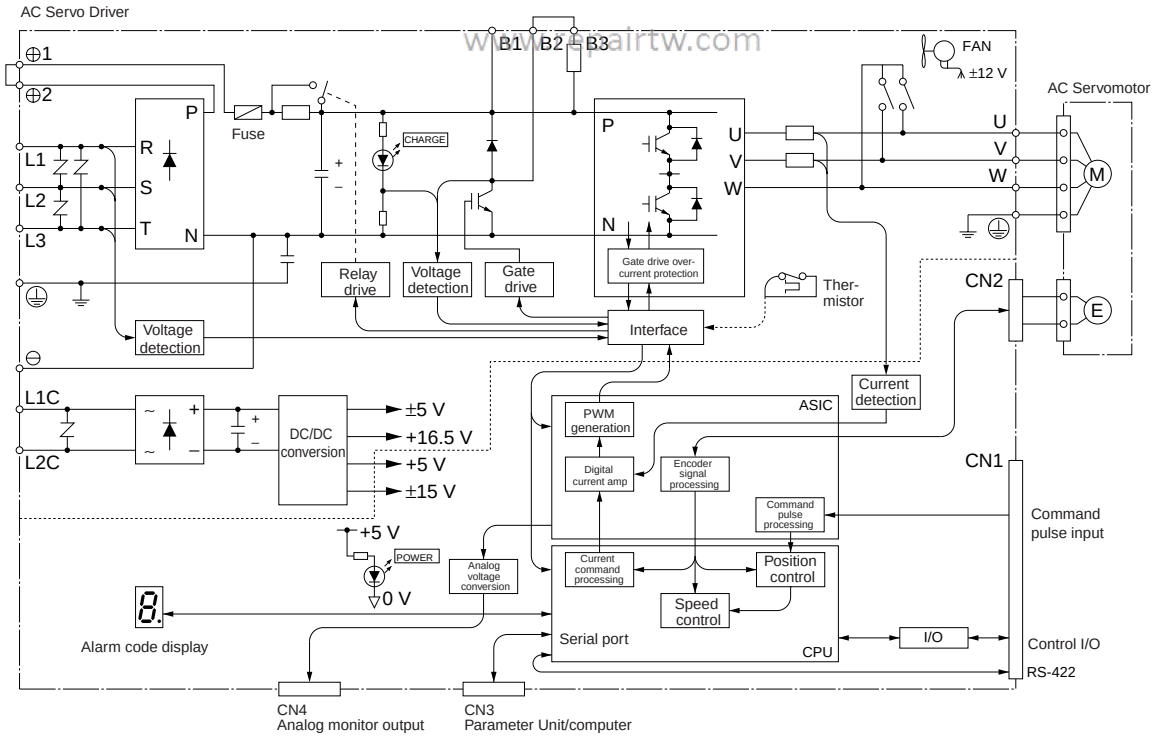

上正科技有限公司
購買、維修 此手冊零組件
電話： 037-466333
Email: service@repairtw.com
Line id: @767
www.repairtw.com

Chapter 2

Standard Models and Specifications

2-1 Standard Models
2-2 External and Mounted Dimensions
2-3 Servo Driver Specifications
2-4 Servomotor Specifications
2-5 Reduction Gear Specifications
2-6 Cable and Connector Specifications
2-7 Servo Relay Units and Cable Specifications
2-8 Parameter Unit Specifications
2-9 External Regeneration Resistor Specifications
2-10 DC Reactors

2-1 Standard Models

■ Servomotors

● 3,000-r/min Cylinder-style Servomotors

Specifications			Model
Without brake	Straight shaft without key	30 W	R7M-A03030
		50 W	R7M-A05030
		100 W	R7M-A10030
		200 W	R7M-A20030
		400 W	R7M-A40030
		750 W	R7M-A75030
	Straight shaft with key	30 W	R7M-A03030-S1
		50 W	R7M-A05030-S1
		100 W	R7M-A10030-S1
		200 W	R7M-A20030-S1
		400 W	R7M-A40030-S1
		750 W	R7M-A75030-S1
With brake	Straight shaft without key	30 W	R7M-A03030-B
		50 W	R7M-A05030-B
		100 W	R7M-A10030-B
		200 W	R7M-A20030-B
		400 W	R7M-A40030-B
		750 W	R7M-A75030-B
	Straight shaft with key	30 W	R7M-A03030-BS1
		50 W	R7M-A05030-BS1
		100 W	R7M-A10030-BS1
		200 W	R7M-A20030-BS1
		400 W	R7M-A40030-BS1
		750 W	R7M-A75030-BS1

● 3,000-r/min Flat-style Servomotors

Specifications			Model
Without brake	Straight shaft without key	100 W	R7M-AP10030
		200 W	R7M-AP20030
		400 W	R7M-AP40030
		750 W	R7M-AP75030
	Straight shaft with key	100 W	R7M-AP10030-S1
		200 W	R7M-AP20030-S1
		400 W	R7M-AP40030-S1
		750 W	R7M-AP75030-S1
With brake	Straight shaft without key	100 W	R7M-AP10030-B
		200 W	R7M-AP20030-B
		400 W	R7M-AP40030-B
		750 W	R7M-AP75030-B
	Straight shaft with key	100 W	R7M-AP10030-BS1
		200 W	R7M-AP20030-BS1
		400 W	R7M-AP40030-BS1
		750 W	R7M-AP75030-BS1

■ Servo Drivers

Specifications		Model
Single-phase 100 V AC	30 W	R7D-APA3L
	50 W	R7D-APA5L
	100 W	R7D-AP01L
	200 W	R7D-AP02L
	400 W	R7D-AP04L
Single-phase 200 V AC	30 W	R7D-APA3H
	50 W	R7D-APA5H
	100 W	R7D-AP01H
	200 W	R7D-AP02H
	400 W	R7D-AP04H
	750 W	R7D-AP08H

大成科技有限公司
購買、維修 此手冊零組件
電話：037-466333
Email: service@repairtw.com
Line id: @zzzz
www.repairtw.com

■ Reduction Gears (Straight Shaft with Key)

● For Cylinder-style Servomotors (Backlash = 3′ Max.)

Specifications		Model
Servomotor capacity	Reduction gears (deceleration ratio)	
50 W	1/5	R7G-VRSFPB05B50
	1/9	R7G-VRSFPB09B50
	1/15	R7G-VRSFPB15B50
	1/25	R7G-VRSFPB25B50
100 W	1/5	R7G-VRSFPB05B100
	1/9	R7G-VRSFPB09B100
	1/15	R7G-VRSFPB15B100
	1/25	R7G-VRSFPB25B100
200 W	1/5	R7G-VRSFPB05B200
	1/9	R7G-VRSFPB09C400
	1/15	R7G-VRSFPB15C400
	1/25	R7G-VRSFPB25C200
400 W	1/5	R7G-VRSFPB05C400
	1/9	R7G-VRSFPB09C400
	1/15	R7G-VRSFPB15C400
	1/25	R7G-VRSFPB25D400
750 W	1/5	R7G-VRSFPB05C750
	1/9	R7G-VRSFPB09D750
	1/15	R7G-VRSFPB15D750
	1/25	R7G-VRSFPB25E750

Note There are no reduction gears for 30-W Servomotors.

● For Cylinder-style Servomotors (Backlash = 45′ Max.)

Specifications		Model
Servomotor capacity	Reduction gears (deceleration ratio)	
50 W	1/5	R7G-RGSF05B50
	1/9	R7G-RGSF09B50
	1/15	R7G-RGSF15B50
	1/25	R7G-RGSF25B50
100 W	1/5	R7G-RGSF05B100
	1/9	R7G-RGSF09B100
	1/15	R7G-RGSF15B100
	1/25	R7G-RGSF25B100
200 W	1/5	R7G-RGSF05B200
	1/9	R7G-RGSF09C400
	1/15	R7G-RGSF15C400
	1/25	R7G-RGSF25C400
400 W	1/5	R7G-RGSF05C400
	1/9	R7G-RGSF09C400
	1/15	R7G-RGSF15C400
	1/25	R7G-RGSF25C400
750 W	1/5	R7G-RGSF05C750
	1/9	R7G-RGSF09C750
	1/15	R7G-RGSF15C750
	1/25	R7G-RGSF25C750

Note There are no reduction gears for 30-W Servomotors.

上達科技有限公司
購買、維修 此手冊零組件
電話: 037-466333
Email: service@repairtw.com
Line id: @zzzz
www.repairtw.com

● For Flat-style Servomotors (Backlash = 3′ Max.)

Specifications		Model
Servomotor capacity	Reduction gears (deceleration ratio)	
100 W	1/5	R7G-VRSFPB05B100P
	1/9	R7G-VRSFPB09B100P
	1/15	R7G-VRSFPB15B100P
	1/25	R7G-VRSFPB25C100P
200 W	1/5	R7G-VRSFPB05B200P
	1/9	R7G-VRSFPB09C400P
	1/15	R7G-VRSFPB15C400P
	1/25	R7G-VRSFPB25C200P
400 W	1/5	R7G-VRSFPB05C400P
	1/9	R7G-VRSFPB09C400P
	1/15	R7G-VRSFPB15C400P
	1/25	R7G-VRSFPB25D400P
750 W	1/5	R7G-VRSFPB05C750P
	1/9	R7G-VRSFPB09D750P
	1/15	R7G-VRSFPB15D750P
	1/25	R7G-VRSFPB25E750P

● For Flat-style Servomotors (Backlash = 45′ Max.)

Specifications		Model
Servomotor capacity	Reduction gears (deceleration ratio)	
100 W	1/5	R7G-RGSF05B100P
	1/9	R7G-RGSF09B100P
	1/15	R7G-RGSF15B100P
	1/25	R7G-RGSF25B100P
200 W	1/5	R7G-RGSF05B200P
	1/9	R7G-RGSF09C400P
	1/15	R7G-RGSF15C400P
	1/25	R7G-RGSF25C400P
400 W	1/5	R7G-RGSF05C400P
	1/9	R7G-RGSF09C400P
	1/15	R7G-RGSF15C400P
	1/25	R7G-RGSF25C400P
750 W	1/5	R7G-RGSF05C750P
	1/9	R7G-RGSF09C750P
	1/15	R7G-RGSF15C750P
	1/25	R7G-RGSF25C750P

■ Servo Relay Units for CN1

Specifications			Model
Servo Relay Unit	For CS1W-NC113/133 CJ1W-NC113/133 C200HW-NC113 C200H-NC112 3F88M-DRT141 (No communications supported.)		XW2B-20J6-1B
	For CS1W-NC213/233/413/433 CJ1W-NC213/233/413/433 C200HW-NC213/413 C500-NC113/211 C200H-NC211 (No communications supported.)		XW2B-40J6-2B
	For CS1W-HCP22 CQM1H-PLB21 CQM1-CPU43-V1 (No communications supported.)		XW2B-20J6-3B
	For CS1W-NC213/233/413/433 CJ1W-NC213/233/413/433 (Communications supported.)		XW2B-40J6-4A
	For CJ1M-CPU21/CPU22/CPU23		XW2B-20J6-8A
			XW2B-40J6-9A
	For CS1W-HCP22-V1 and FQM1-MMP21		XW2B-80J7-1A
Servo Driver Cable	No communications supported.	1 m	XW2Z-100J-B5
		2 m	XW2Z-200J-B5
	Communications supported.	1 m	XW2Z-100J-B7
		2 m	XW2Z-200J-B7
	For FQM1-MMP21	1 m	XW2Z-100J-B10
		2 m	XW2Z-200J-B10
	For CS1W-HCP22-V1	1 m	XW2Z-100J-B12
		2 m	XW2Z-200J-B12
Position Control Unit Cable	For CQM1H-PLB21, CQM1-CPU43-V1	0.5 m	XW2Z-050J-A3
		1 m	XW2Z-100J-A3
	For C200H-NC112	0.5 m	XW2Z-050J-A4
		1 m	XW2Z-100J-A4
	For C200H-NC211, C500-NC113/211	0.5 m	XW2Z-050J-A5
		1 m	XW2Z-100J-A5
	For CS1W-NC113, C200HW-NC113	0.5 m	XW2Z-050J-A8
		1 m	XW2Z-100J-A8
	For CS1W-NC213/413, C200HW-NC213/413	0.5 m	XW2Z-050J-A9
		1 m	XW2Z-100J-A9
	For CS1W-NC133	0.5 m	XW2Z-050J-A12
		1 m	XW2Z-100J-A12
	For CS1W-NC233/433	0.5 m	XW2Z-050J-A13
		1 m	XW2Z-100J-A13
	For CJ1W-NC113	0.5 m	XW2Z-050J-A16
		1 m	XW2Z-100J-A16
	For CJ1W-NC213/413	0.5 m	XW2Z-050J-A17
		1 m	XW2Z-100J-A17
	For CJ1W-NC133	0.5 m	XW2Z-050J-A20
		1 m	XW2Z-100J-A20
	For CJ1W-NC233/433	0.5 m	XW2Z-050J-A21
		1 m	XW2Z-100J-A21
	For CS1W-HCP22 (1 axis)	0.5 m	XW2Z-050J-A22
		1 m	XW2Z-100J-A22
	For CS1W-HCP22 (2 axes)	0.5 m	XW2Z-050J-A23
		1 m	XW2Z-100J-A23
	For 3F88M-DRT141	0.5 m	XW2Z-050J-A25
		1 m	XW2Z-100J-A25
Position Control Unit Cable	For CJ1M-CPU21/CPU22/CPU23	1 m	XW2Z-100J-A26
	For FQM1-MMP21 for general-purpose I/O	0.5 m	XW2Z-050J-A28
		1 m	XW2Z-100J-A28
	For CS1W-HCP22-V1 for general-purpose I/O	0.5 m	XW2Z-050J-A29
		1 m	XW2Z-100J-A29
	For FQM1-MMP21 for special I/O	0.5 m	XW2Z-050J-A30
		1 m	XW2Z-100J-A30
	For CS1W-HCP22-V1 for special I/O	0.5 m	XW2Z-050J-A32
		1 m	XW2Z-100J-A32

■ Control Cables for CN1

Specifications		Model
General-purpose Control Cable (with Connector on one end)	1 m	R88A-CPU001S
	2 m	R88A-CPU002S
Connector Terminal Block Cable	1 m	R88A-CTU001N
	2 m	R88A-CTU002N
Connector Terminal Blocks		XW2B-40F5-P

■ Integrated Servomotor Cables

Specifications		Model
For Servomotors without brakes (both Cylinder- and Flat-style)	3 m	R7A-CEA003S
	5 m	R7A-CEA005S
	10 m	R7A-CEA010S
	15 m	R7A-CEA015S
	20 m	R7A-CEA020S
For Servomotors with brakes (both Cylinder- and Flat-style)	3 m	R7A-CEA003B
	5 m	R7A-CEA005B
	10 m	R7A-CEA010B
	15 m	R7A-CEA015B
	20 m	R7A-CEA020B

■ Separate Servomotor Cables

● Power Cables

Specifications		Standard cable model	Robot cable model
For Servomotors without brakes (both Cylinder- and Flat-style)	3 m	R88A-CAWA003S	R88A-CAWA003SR
	5 m	R88A-CAWA005S	R88A-CAWA005SR
	10 m	R88A-CAWA010S	R88A-CAWA010SR
	15 m	R88A-CAWA015S	R88A-CAWA015SR
	20 m	R88A-CAWA020S	R88A-CAWA020SR
For Servomotors with brakes (both Cylinder- and Flat-style)	3 m	R88A-CAWA003B	R88A-CAWA003BR
	5 m	R88A-CAWA005B	R88A-CAWA005BR
	10 m	R88A-CAWA010B	R88A-CAWA010BR
	15 m	R88A-CAWA015B	R88A-CAWA015BR
	20 m	R88A-CAWA020B	R88A-CAWA020BR

● Encoder Cables

Specifications		Standard cable model	Robot cable model
For Servomotors (Cylinder-style or Flat-style)	3 m	R7A-CRA003C	R7A-CRA003CR
	5 m	R7A-CRA005C	R7A-CRA005CR
	10 m	R7A-CRA010C	R7A-CRA010CR
	15 m	R7A-CRA015C	R7A-CRA015CR
	20 m	R7A-CRA020C	R7A-CRA020CR

Note Use a robot cable if cable flexibility is required.

中科技有限公司
購買、維修、此手冊零組件
電話：037-462337
Email：service@repairtw.com
Line Id：@zzzz
www.repairtw.com

■ Peripheral Cable Connectors

Specifications			Model
Analog Monitor Cable (CN4)		1 m	R88A-CMW001S
Computer Monitor Cable (CN3)	DOS	2 m	R7A-CCA002P2
	PC98	2 m	R7A-CCA002P3
Control I/O Connector (CN1)			R88A-CNU01C
Encoder Connector (CN2)			R7A-CNA01R
Encoder Connector (Servomotor end)			R7A-CNA02R
Communications Cable		1 m	XW2Z-100J-C1
		2 m	XW2Z-200J-C1

■ Parameter Units

Specifications	Model
Hand-held (with 1-m cable)	R7A-PR02A

■ External Regeneration Resistors

Specifications		Model
Resistor	220 W 47 Ω	R88A-RR22047S

■ DC Reactors

Specifications	Model
For R7D-APA3L/APA5L/APA01L	R88A-PX5063
For R7D-AP02L	R88A-PX5062
For R7D-AP04L	R88A-PX5061
For R7D-APA3H/APA5H/AP01H	R88A-PX5071
For R7D-AP02H	R88A-PX5070
For R7D-AP04H	R88A-PX5069
For R7D-AP08H	R88A-PX5061

上正科技有限公司
專業維修 此手冊零組件
電話 037-466333
Email service@repairtw.com
line id @zzzz
www.repairtw.com

■ Front-panel Brackets

Specifications	Model
For the SMARTSTEP A Series	R88A-TK01W

2-2 External and Mounted Dimensions

2-2-1 Servo Drivers

■ **Single-phase 100 V AC: R7D-APA3L/-APA5L/-AP01L/-AP02L (30 W to 200 W)**
Single-phase 200 V AC: R7D-APA3H/-APA5H/-AP01H/-AP02H (30 W to 200 W)

● **Wall Mounting**

External dimensions

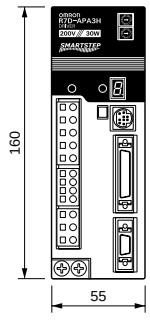

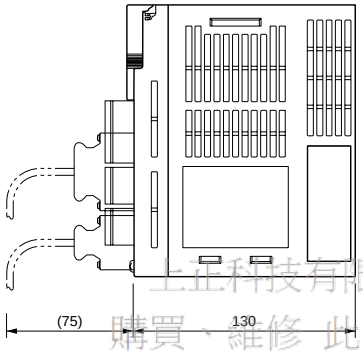

Mounted dimensions

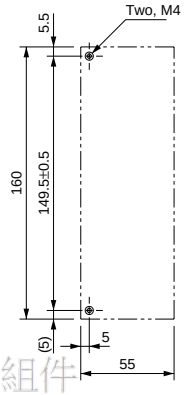

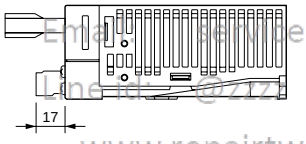

上正科技有限公司
購買、維修 此手冊零組件
電話： 037-466333
Email: service@repairtw.com
Line ID: @212
www.repairtw.com

● **Front Panel Mounting (Using Mounting Brackets)**

External dimensions

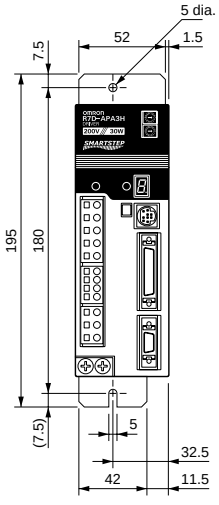

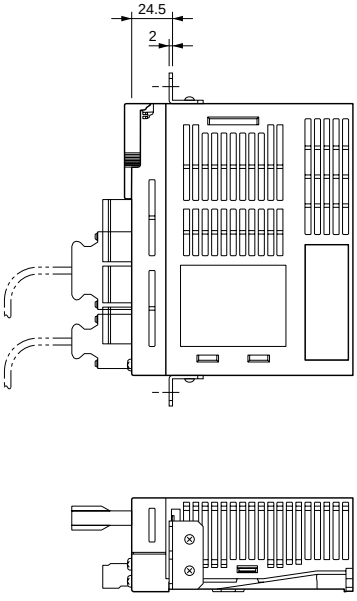

Mounted dimensions

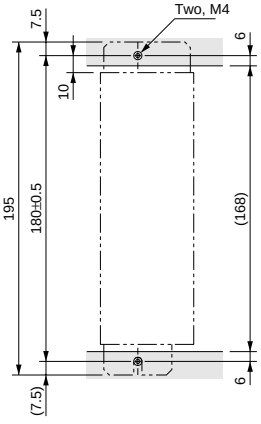

■ Single-phase 100 V AC: R7D-AP04L (400 W)
Single-phase 200 V AC: R7D-AP04H (400 W)

● Wall Mounting

External dimensions

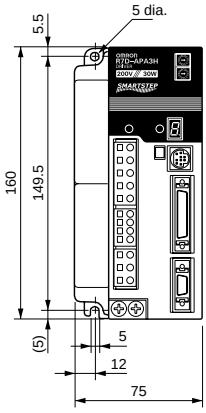

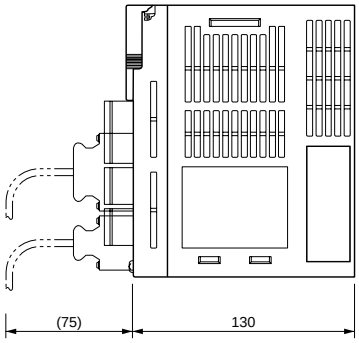

Mounted dimensions

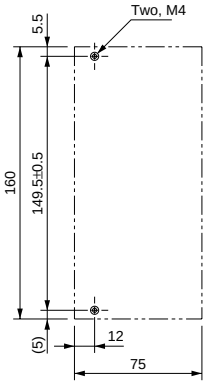

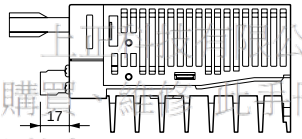

上閥企業有限公司
購買、維修各品牌零組件
電話： 037-466333
E-mail: service@repairtw.com
Line id: @zzzz
www.repairtw.com

● Front Panel Mounting (Using Mounting Brackets)

External dimensions

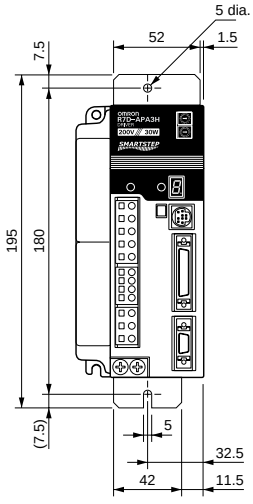

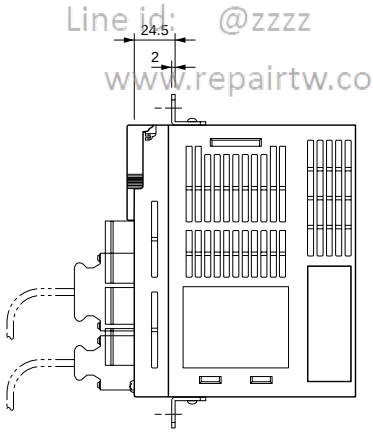

Mounted dimensions

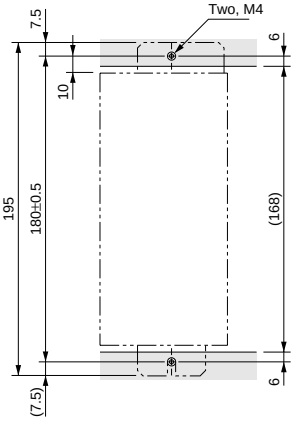

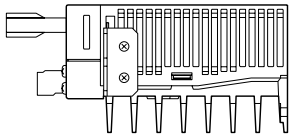

■ Single-phase/Three-phase 200 V AC: R7D-AP08H (750 W)

● Wall Mounting

External dimensions

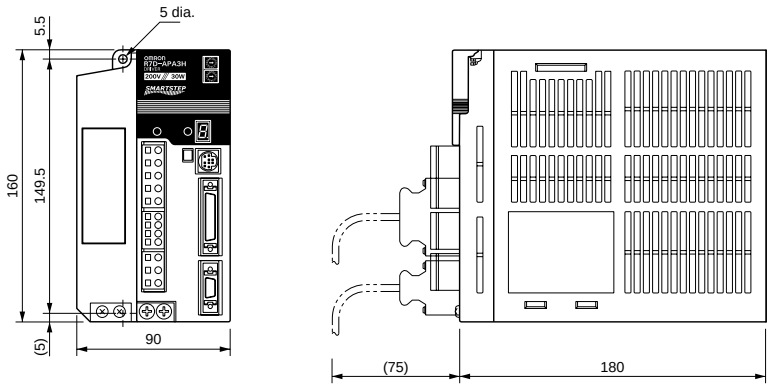

Mounted dimensions

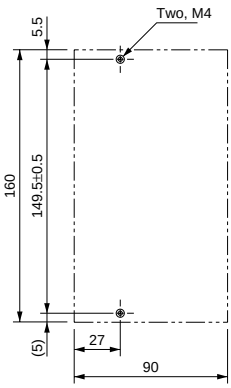

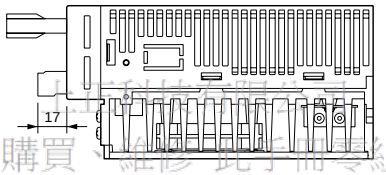

上新科技有限公司
購買、維修 此手冊零組件
電話： 037-466333
Email: service@repairtw.com
Line id: @zzzz
www.repairtw.com

● Front Panel Mounting (Using Mounting Brackets)

External dimensions

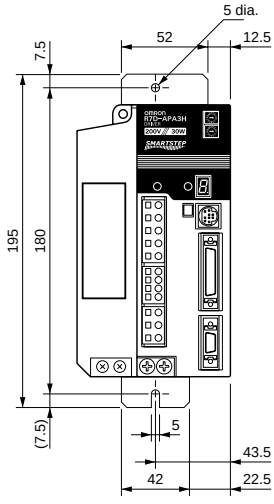

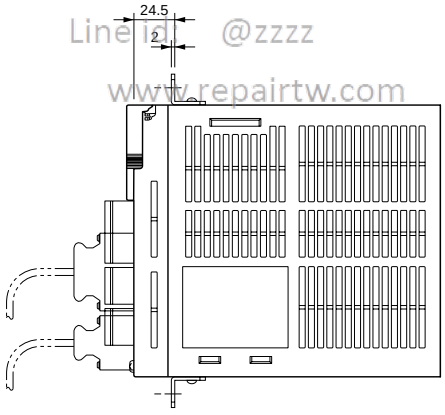

Mounted dimensions

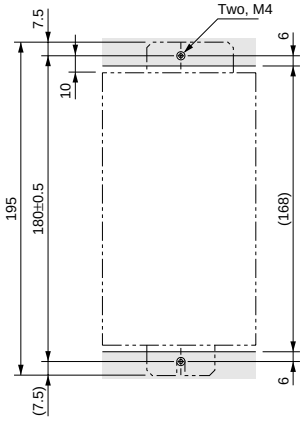

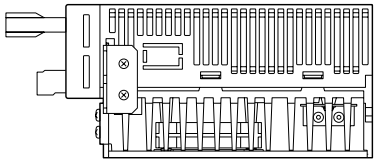

2-2-2 Parameter Unit

■ R7A-PR02A Hand-held Parameter Unit

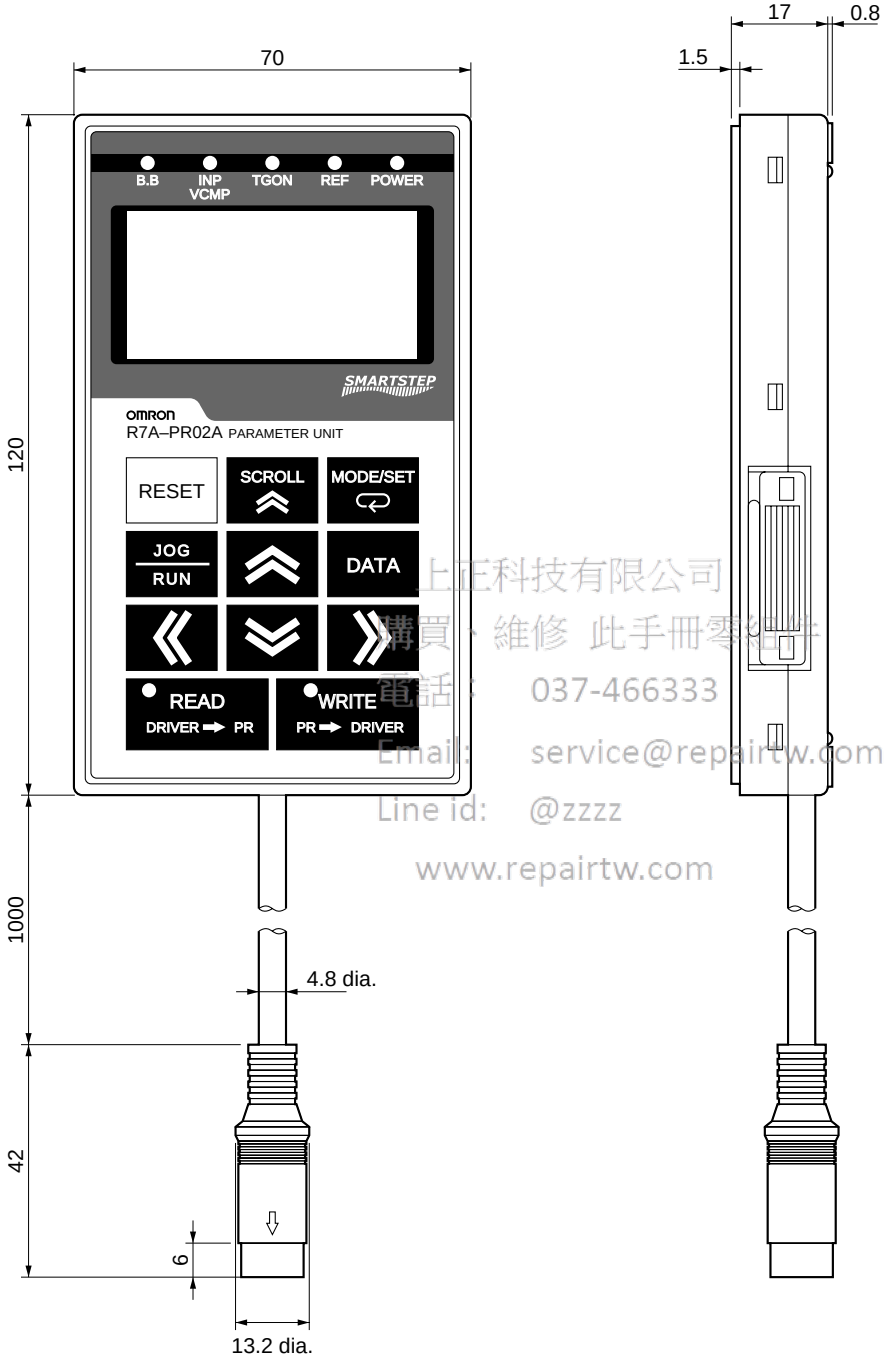

上正科技有限公司
購買、維修 此手冊零組件
電話: 037-466333
Email: service@repairtw.com
Line id: @zzzz
www.repairtw.com

2-2-3 Servomotors

■ Cylinder-style Servomotors without a Brake

● 30 W/50 W/100 W R7M-A03030(-S1)/-A05030(-S1)/-A10030(-S1)

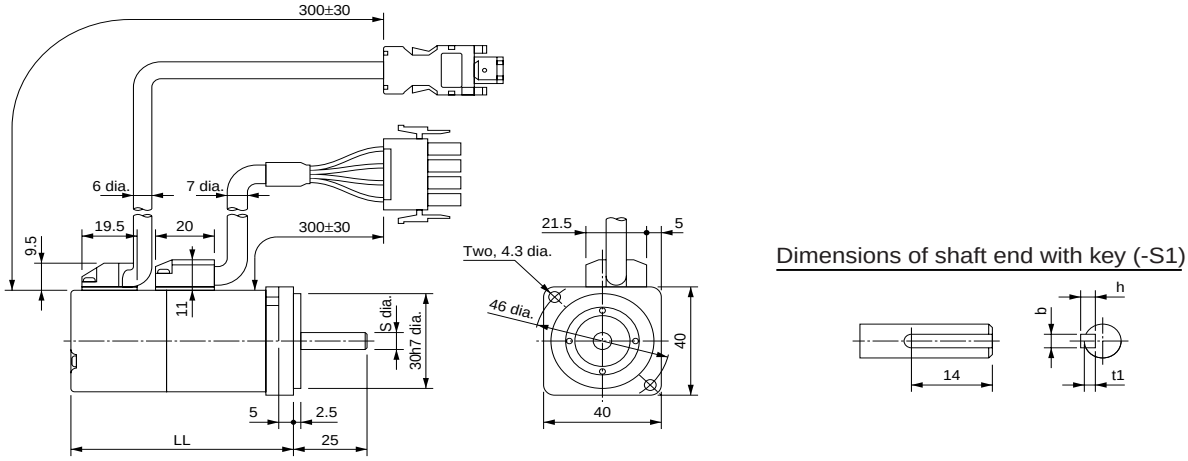

Model	Dimensions (mm)				
	LL	S	b	h	t1
R7M-A03030-□	69.5	6h6	2	2	1.2
R7M-A05030-□	77	6h6	2	2	1.2
R7M-A10030-□	94.5	8h6	3	3	1.8

上正科技有限公司
購買、維修 此手冊零組件
電話: 037-466333
Email: service@repairtw.com
Line id: @2222
www.repairtw.com

■ Cylinder-style Servomotors with a Brake

● 30 W/50 W/100 W R7M-A03030-B(S1)/-A05030-B(S1)/-A10030-B(S1)

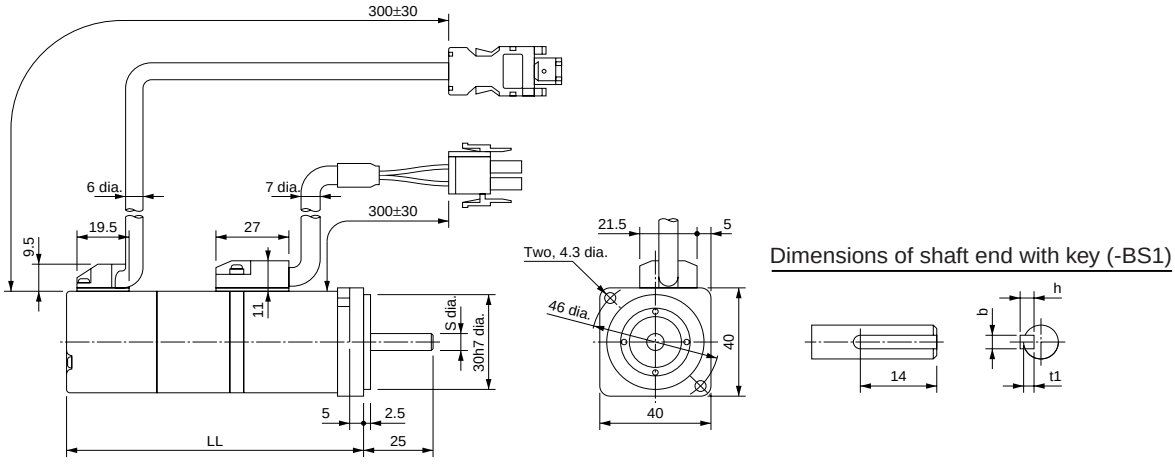

Model	Dimensions (mm)				
	LL	S	b	h	t1
R7M-A03030-B□	101	6h6	2	2	1.2
R7M-A05030-B□	108.5	6h6	2	2	1.2
R7M-A10030-B□	135	8h6	3	3	1.8

■ Cylinder-style Servomotors without a Brake

● 200 W/400 W/750 W R7M-A20030(-S1)/-A40030(-S1)/-A75030(-S1)

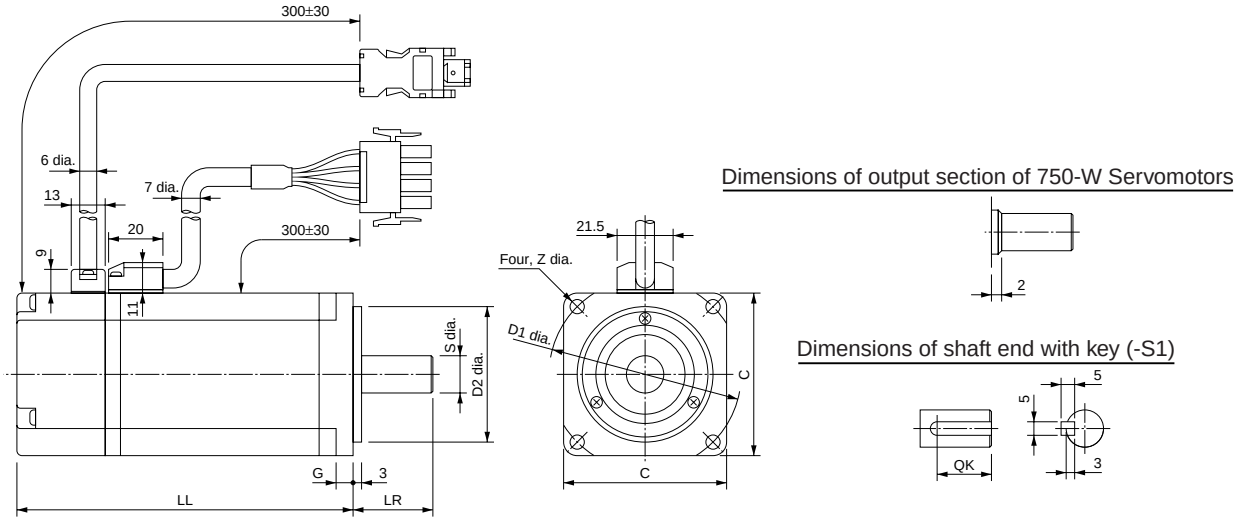

Model	Dimensions (mm)								
	LL	LR	C	D1	D2	G	Z	S	QK
R7M-A20030-□	96.5	30	60	70	50h7	6	5.5	14h6	20
R7M-A40030-□	124.5	30	60	70	50h7	6	5.5	14h6	20
R7M-A75030-□	145	40	80	90	70h7	8	7	16h6	30

上正科技有限公司
購買 / 維修 / 技手冊查詢
電話 : 037166337
Email: service@repairtw.com
Line id: @zzzz
www.repairtw.com

■ Cylinder-style Servomotors with a Brake

● 200 W/400 W/750 W R7M-A20030-B(S1)/-A40030-B(S1)/-A75030-B(S1)

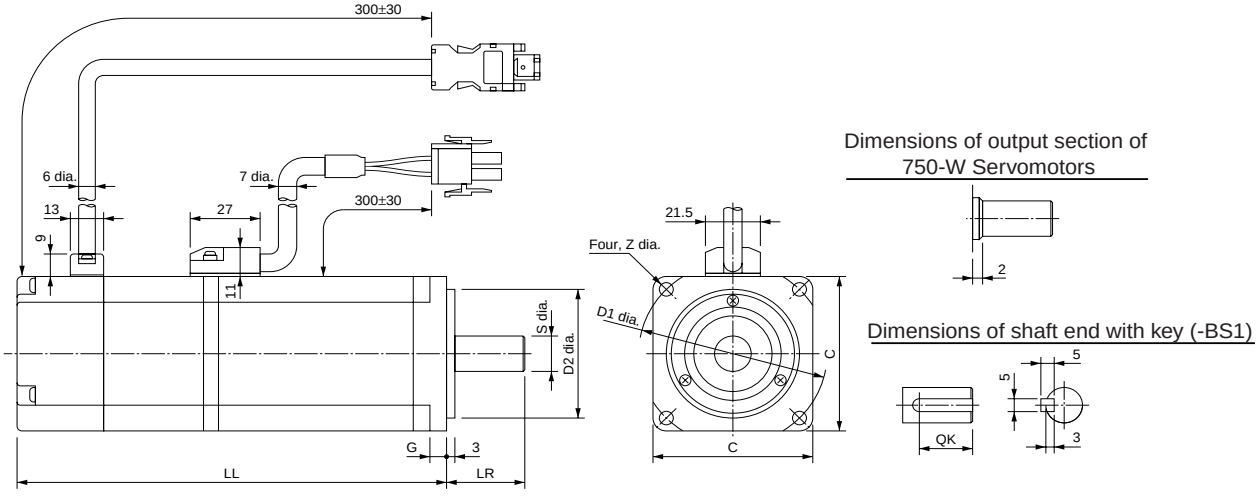

Model	Dimensions (mm)								
	LL	LR	C	D1	D2	G	Z	S	QK
R7M-A20030-B□	136	30	60	70	50h7	6	5.5	14h6	20
R7M-A40030-B□	164	30	60	70	50h7	6	5.5	14h6	20
R7M-A75030-B□	189.5	40	80	90	70h7	8	7	16h6	30

■ Flat-style Servomotors without a Brake

● 100 W/200 W/400 W/750 W R7M-AP10030(-S1)/-AP20030(-S1)/-AP40030(-S1)/AP75030(-S1)

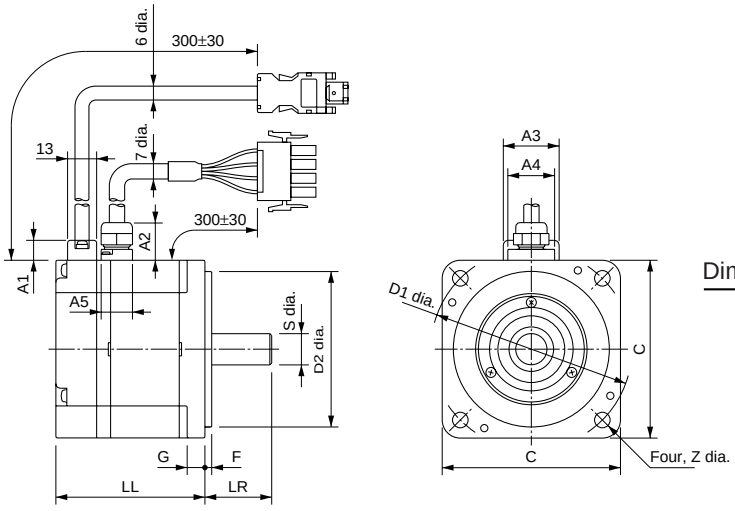

Dimensions of shaft end with key (-S1)

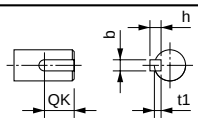

Model	Dimensions (mm)																	
	Basic servomotor dimensions									With key (shaft end dimensions)				Cable outlet dimensions				
	LL	LR	C	D1	D2	F	G	Z	S	QK	b	h	t1	A1	A2	A3	A4	A5
R7M-AP10030-□	62	25	60	70	50h7	3	6	5.5	8h6	14	3	3	1.8	9	18	25	21	14
R7M-AP20030-□	67	30	80	90	70h7	3	8	7	14h6	16	5	5	3					
R7M-AP40030-□	87																	
R7M-AP75030-□	86.5	40	120	145	110h7	3.5	10	10	16h6	22	5	5	3		28		38	19

上海科技有限公司
購買、維修此手冊零組件
電話：+886-937-466322
Email: service@repairtw.com
Line id: @zzzz
www.repairtw.com

■ Flat-style Servomotors with a Brake

● 100 W/200 W/400 W/750 W R7M-AP10030-B(S1)/-AP20030-B(S1)/-AP40030-B(S1)/AP75030-B(S1)

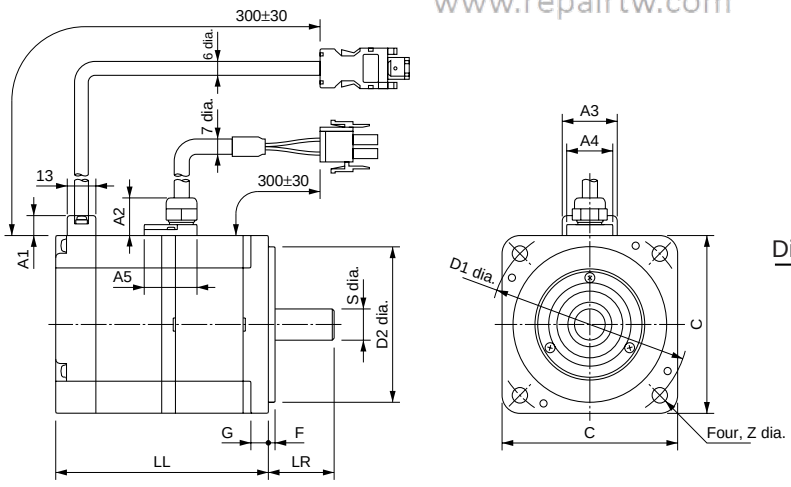

Dimensions of shaft end with key (-BS1)

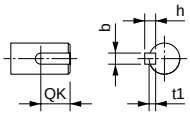

Model	Dimensions (mm)																	
	Basic servomotor dimensions									With key (shaft end dimensions)				Cable outlet dimensions				
	LL	LR	C	D1	D2	F	G	Z	S	QK	b	h	t1	A1	A2	A3	A4	A5
R7M-AP10030-B□	91	25	60	70	50h7	3	6	5.5	8h6	14	3	3	1.8	9	18	25	21	23
R7M-AP20030-B□	98.5	30	80	90	70h7	3	8	7	14h6	16	5	5	3					
R7M-AP40030-B□	118.5																	
R7M-AP75030-B□	120	40	120	145	110h7	3.5	10	10	16h6	22	5	5	3		28		38	26

2-2-4 Reduction Gears

■ For Cylinder-style Servomotors (Backlash = 3′ Max.)

Model			Dimensions (mm)																					Weight (kg)
			LM	LR	C1	C2	D1	D2	D3	D4	E3	F	G	S	T	Z1	Z2	AT*	ℓ	Key dimensions				
																				QK	b	h	t1	
50 W	1/5	R7G-VRSFPB05B50	67.5	32	52	40	46	60	50	45	10	3	6	12	20	M4	M5	M3	12	16	4	4	2.5	0.55
	1/9	R7G-VRSFPB09B50	67.5	32	52	40	46	60	50	45	10	3	6	12	20	M4	M5	M3	12	16	4	4	2.5	0.55
	1/15	R7G-VRSFPB15B50	78	32	52	40	46	60	50	45	10	3	6	12	20	M4	M5	M3	12	16	4	4	2.5	0.7
	1/25	R7G-VRSFPB25B50	78	32	52	40	46	60	50	45	10	3	6	12	20	M4	M5	M3	12	16	4	4	2.5	0.7
100 W	1/5	R7G-VRSFPB05B100	67.5	32	52	40	46	60	50	45	10	3	6	12	20	M4	M5	M3	12	16	4	4	2.5	0.55
	1/9	R7G-VRSFPB09B100	67.5	32	52	40	46	60	50	45	10	3	6	12	20	M4	M5	M3	12	16	4	4	2.5	0.55
	1/15	R7G-VRSFPB15B100	78	32	52	40	46	60	50	45	10	3	6	12	20	M4	M5	M3	12	16	4	4	2.5	0.7
	1/25	R7G-VRSFPB25C100	92	50	78	40	46	90	70	62	17	3	6	19	30	M4	M6	M3	20	22	6	6	3.5	1.7
200 W	1/5	R7G-VRSFPB05B200	72.5	32	52	60	70	60	50	45	10	3	10	12	20	M5	M5	M4	12	16	4	4	2.5	0.72
	1/9	R7G-VRSFPB09C400	89.5	50	78	60	70	90	70	62	17	3	8	19	30	M5	M6	M4	20	22	6	6	3.5	1.7
	1/15	R7G-VRSFPB15C400	100	50	78	60	70	90	70	62	17	3	8	19	30	M5	M6	M4	20	22	6	6	3.5	2.1
	1/25	R7G-VRSFPB25C400	100	50	78	60	70	90	70	62	17	3	8	19	30	M5	M6	M4	20	22	6	6	3.5	2.1
400 W	1/5	R7G-VRSFPB05C400	89.5	50	78	60	70	90	70	62	17	3	8	19	30	M5	M6	M4	20	22	6	6	3.5	1.7
	1/9	R7G-VRSFPB09C400	89.5	50	78	60	70	90	70	62	17	3	8	19	30	M5	M6	M4	20	22	6	6	3.5	1.7
	1/15	R7G-VRSFPB15C400	100	50	78	60	70	90	70	62	17	3	8	19	30	M5	M6	M4	20	22	6	6	3.5	2.1
	1/25	R7G-VRSFPB25D400	104	61	98	60	70	115	90	75	18	5	8	24	40	M5	M8	M4	20	30	8	7	4	3.2
750 W	1/5	R7G-VRSFPB05C750	93.5	50	78	80	90	90	70	62	17	3	10	19	30	M6	M6	M4	20	22	6	6	3.5	2.1
	1/9	R7G-VRSFPB09D750	97.5	61	98	80	90	115	90	75	18	5	10	24	40	M6	M8	M4	20	30	8	7	4	3.4
	1/15	R7G-VRSFPB15D750	110	61	98	80	90	115	90	75	18	5	10	24	40	M6	M8	M4	20	30	8	7	4	3.8
	1/25	R7G-VRSFPB25E750	135	75	125	80	90	135	110	98	17	5	10	32	55	M6	M10	M4	20	45	10	8	5	7.2

* "AT" in the table refers to the set bolt.

中部機器有限公司
購買、維修 數字伺服零組件
電話： 037-466333
Email: service@repairtw.com
Line id: @ezzz
www.repairtw.com

External Diagrams

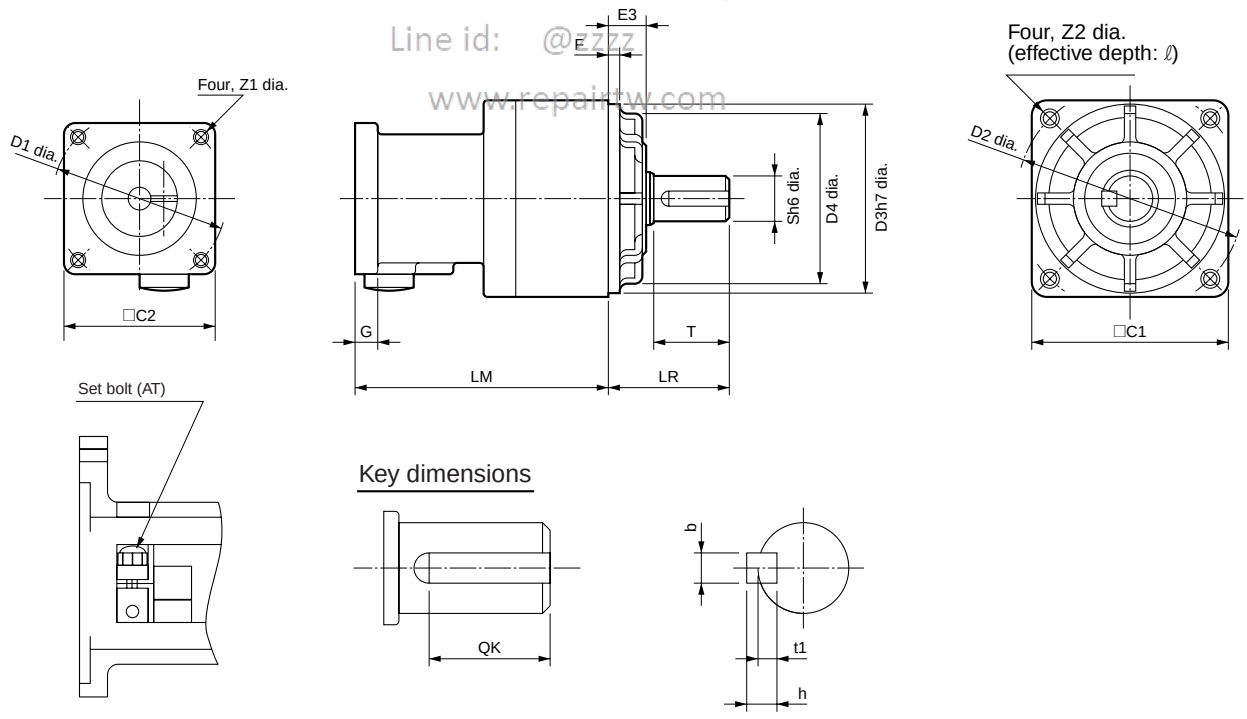

■ For Cylinder-style Servomotors (Backlash = 45′ Max.)

Model			Dimensions (mm)																					Weight (kg)
			LM	LR	C1	C2	D1	D2	D3	D4	E3	F	G	S	T	Z1	Z2	AT*	ℓ	Key dimensions				
																				QK	b	h	t1	
50 W	1/5	R7G-RGSF05B50	67.5	32	52	40	46	60	50	45	10	3	6	12	20	M4	M5	M3	12	16	4	4	2.5	0.55
	1/9	R7G-RGSF09B50	67.5	32	52	40	46	60	50	45	10	3	6	12	20	M4	M5	M3	12	16	4	4	2.5	0.55
	1/15	R7G-RGSF15B50	78	32	52	40	46	60	50	45	10	3	6	12	20	M4	M5	M3	12	16	4	4	2.5	0.70
	1/25	R7G-RGSF25B50	78	32	52	40	46	60	50	45	10	3	6	12	20	M4	M5	M3	12	16	4	4	2.5	0.70
100 W	1/5	R7G-RGSF05B100	67.5	32	52	40	46	60	50	45	10	3	6	12	20	M4	M5	M3	12	16	4	4	2.5	0.55
	1/9	R7G-RGSF09B100	67.5	32	52	40	46	60	50	45	10	3	6	12	20	M4	M5	M3	12	16	4	4	2.5	0.55
	1/15	R7G-RGSF15B100	78	32	52	40	46	60	50	45	10	3	6	12	20	M4	M5	M3	12	16	4	4	2.5	0.70
	1/25	R7G-RGSF25B100	78	32	52	40	46	60	50	45	10	3	6	12	20	M4	M5	M3	12	16	4	4	2.5	0.70
200 W	1/5	R7G-RGSF05B200	72.5	32	52	60	70	60	50	45	10	3	10	12	20	M5	M5	M4	12	16	4	4	2.5	0.72
	1/9	R7G-RGSF09C400	89.5	50	78	60	70	90	70	62	17	3	8	19	30	M5	M6	M4	20	22	6	6	3.5	1.7
	1/15	R7G-RGSF15C400	100	50	78	60	70	90	70	62	17	3	8	19	30	M5	M6	M4	20	22	6	6	3.5	2.1
	1/25	R7G-RGSF25C400	100	50	78	60	70	90	70	62	17	3	8	19	30	M5	M6	M4	20	22	6	6	3.5	2.1
400 W	1/5	R7G-RGSF05C400	89.5	50	78	60	70	90	70	62	17	3	8	19	30	M5	M6	M4	20	22	6	6	3.5	1.7
	1/9	R7G-RGSF09C400	89.5	50	78	60	70	90	70	62	17	3	8	19	30	M5	M6	M4	20	22	6	6	3.5	1.7
	1/15	R7G-RGSF15C400	100	50	78	60	70	90	70	62	17	3	8	19	30	M5	M6	M4	20	22	6	6	3.5	2.1
	1/25	R7G-RGSF25C400	100	50	78	60	70	90	70	62	17	3	8	19	30	M5	M6	M4	20	22	6	6	3.5	2.1
750 W	1/5	R7G-RGSF05C750	93.5	50	78	80	90	90	70	62	17	3	10	19	30	M6	M6	M4	20	22	6	6	3.5	2.1
	1/9	R7G-RGSF09C750	93.5	50	78	80	90	90	70	62	17	3	10	19	30	M6	M6	M4	20	22	6	6	3.5	2.1
	1/15	R7G-RGSF15C750	110	50	78	80	90	90	70	62	17	3	10	19	30	M6	M6	M4	20	22	6	6	3.5	2.5
	1/25	R7G-RGSF25C750	110	50	78	80	90	90	70	62	17	3	10	19	30	M6	M6	M4	20	22	6	6	3.5	2.5

上正科技有限公司
購買、維修 此手冊零組件
電話： 037-466333
Email: service@repairtw.com
Line id: @zzzz
www.repairtw.com

* "AT" in the table refers to the set bolt.

External Diagrams

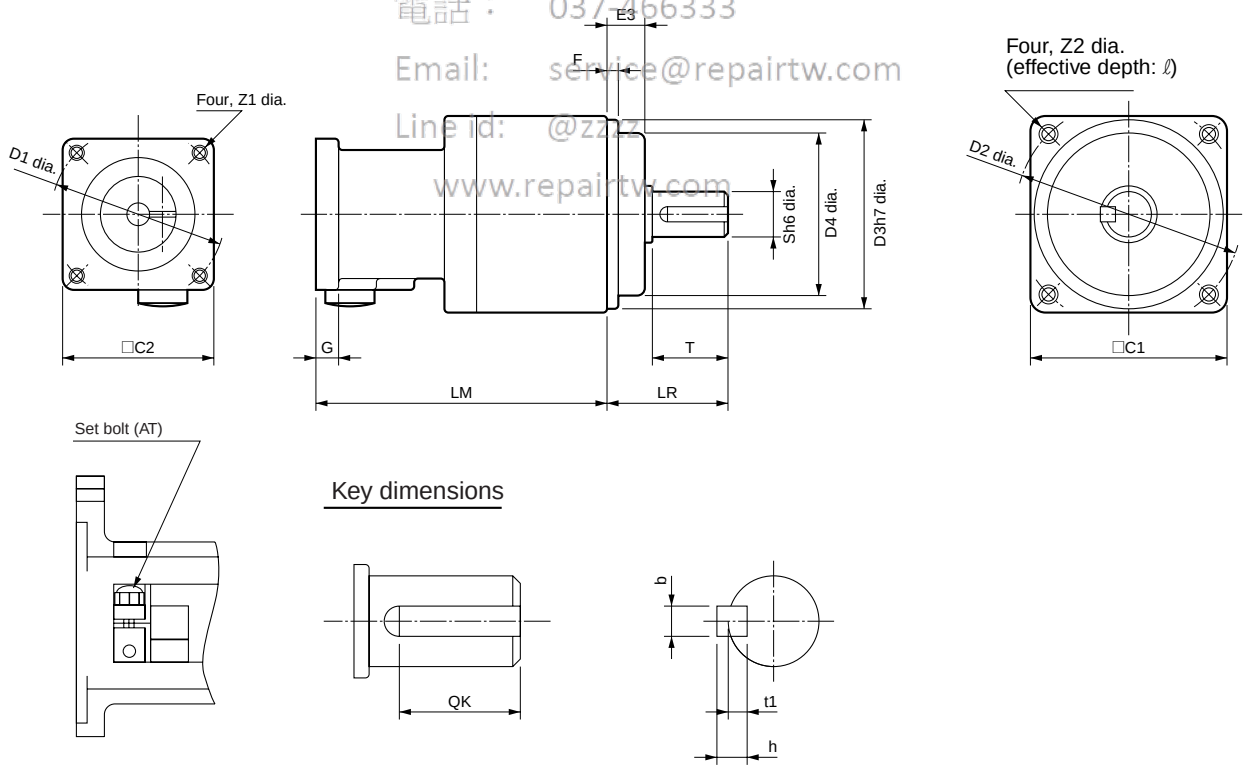

■ For Flat-style Servomotors (Backlash = 3′ Max.)

Model			Dimensions (mm)																					Weight (kg)
			LM	LR	C1	C2	D1	D2	D3	D4	E3	F	G	S	T	Z1	Z2	AT*	ℓ	Key dimensions				
																				QK	b	h	t1	
100 W	1/5	R7G-VRSFPB05B100P	72.5	32	52	60	70	60	50	45	10	3	10	12	20	M5	M5	M4	12	16	4	4	2.5	0.72
	1/9	R7G-VRSFPB09B100P	72.5	32	52	60	70	60	50	45	10	3	10	12	20	M5	M5	M4	12	16	4	4	2.5	0.72
	1/15	R7G-VRSFPB15B100P	83	32	52	60	70	60	50	45	10	3	10	12	20	M5	M5	M4	12	16	4	4	2.5	0.77
	1/25	R7G-VRSFPB25C100P	92	50	78	60	70	90	70	62	17	3	10	19	30	M5	M6	M3	20	22	6	6	3.5	1.8
200 W	1/5	R7G-VRSFPB05B200P	72.5	32	52	80	90	60	50	45	10	3	12	12	20	M6	M5	M4	12	16	4	4	2.5	0.85
	1/9	R7G-VRSFPB09C400P	93.5	50	78	80	90	90	70	62	17	3	12	19	30	M6	M6	M4	20	22	6	6	3.5	1.8
	1/15	R7G-VRSFPB15C400P	100	50	78	80	90	90	70	62	17	3	12	19	30	M6	M6	M4	20	22	6	6	3.5	2.2
	1/25	R7G-VRSFPB25C200P	100	50	78	80	90	90	70	62	17	3	12	19	30	M6	M6	M4	20	22	6	6	3.5	2.2
400 W	1/5	R7G-VRSFPB05C400P	93.5	50	78	80	90	90	70	62	17	3	10	19	30	M6	M6	M4	20	22	6	6	3.5	1.8
	1/9	R7G-VRSFPB09C400P	93.5	50	78	80	90	90	70	62	17	3	12	19	30	M6	M6	M4	20	22	6	6	3.5	1.8
	1/15	R7G-VRSFPB15C400P	100	50	78	80	90	90	70	62	17	3	12	19	30	M6	M6	M4	20	22	6	6	3.5	2.2
	1/25	R7G-VRSFPB25D400P	109	61	98	80	90	115	90	75	18	5	12	24	40	M6	M8	M4	20	30	8	7	4	3.4
750 W	1/5	R7G-VRSFPB05C750P	98	50	78	120	145	90	70	62	17	3	15	19	30	M8	M6	M4	20	22	6	6	3.5	2.6
	1/9	R7G-VRSFPB09D750P	97.5	61	98	120	145	115	90	75	18	5	15	24	40	M8	M8	M4	20	30	8	7	4	3.8
	1/15	R7G-VRSFPB15D750P	110	61	98	120	145	115	90	75	18	5	15	24	40	M8	M8	M4	20	30	8	7	4	4.2
	1/25	R7G-VRSFPB25E750P	155	75	125	120	145	135	110	98	17	5	15	32	55	M8	M10	M4	20	45	10	8	5	7.8

* "AT" in the table refers to the set bolt.

上正科技有限公司
購買、維修 此手冊零組件
電話： 037-466333
Email: service@repairtw.com
Line id: @zzzz
www.repairtw.com

External Diagrams

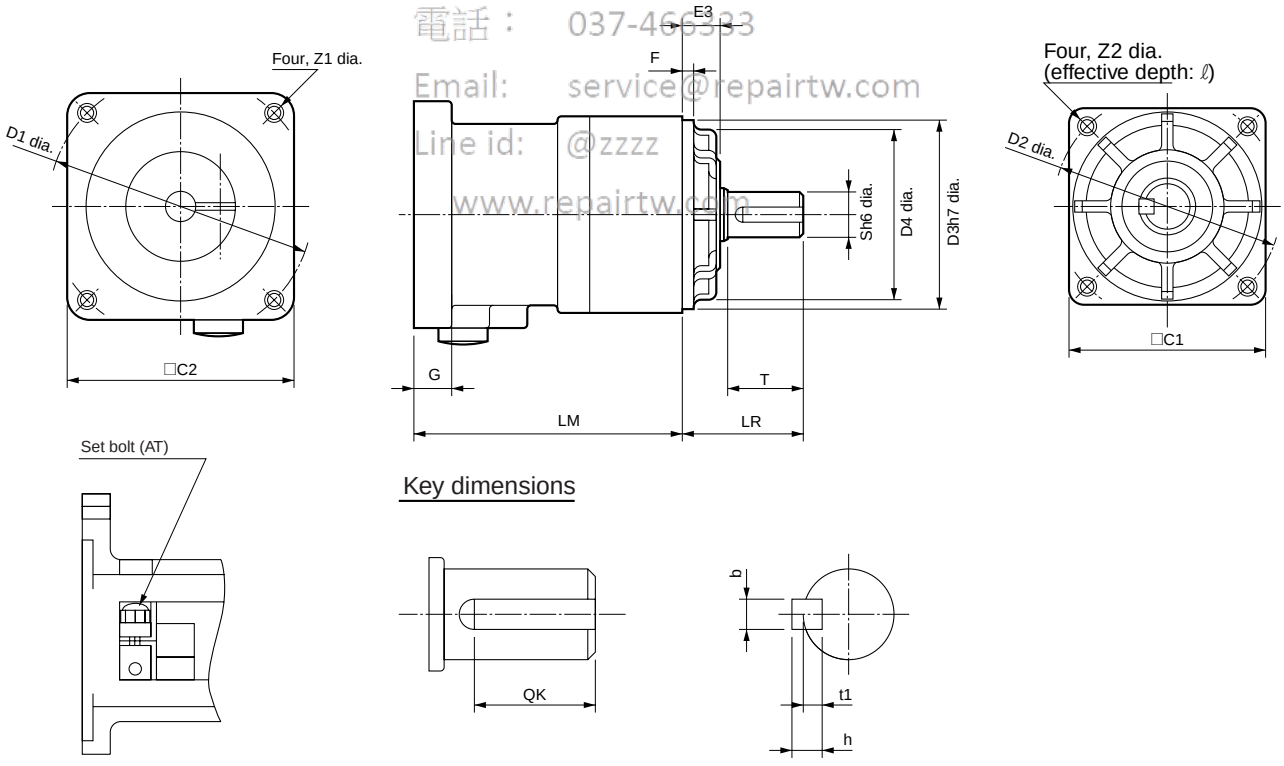

■ For Flat-style Servomotors (Backlash = 45′ Max.)

Model			Dimensions (mm)																				Weight (kg)
			LM	LR	C1	C2	D1	D2	D3	D4	E3	F	G	S	T	Z1	Z2	AT*	ℓ	Key dimensions				
																				QK	b	h	t1	
100 W	1/5	R7G-RGSF05B100P	72.5	32	52	60	70	60	50	45	10	3	10	12	20	M5	M5	M4	12	16	4	4	2.5	0.72
	1/9	R7G-RGSF09B100P	72.5	32	52	60	70	60	50	45	10	3	10	12	20	M5	M5	M4	12	16	4	4	2.5	0.72
	1/15	R7G-RGSF15B100P	78	32	52	60	70	60	50	45	10	3	8	12	20	M5	M5	M4	12	16	4	4	2.5	0.77
	1/25	R7G-RGSF25B100P	78	32	52	60	70	60	50	45	10	3	8	12	20	M5	M5	M4	12	16	4	4	2.5	0.77
200 W	1/5	R7G-RGSF05B200P	72.5	32	52	80	90	60	50	45	10	3	12	12	20	M6	M5	M4	12	16	4	4	2.5	0.85
	1/9	R7G-RGSF09C400P	89.5	50	78	80	90	90	70	62	17	3	12	19	30	M6	M6	M4	20	22	6	6	3.5	1.8
	1/15	R7G-RGSF15C400P	100	50	78	80	90	90	70	62	17	3	12	19	30	M6	M6	M4	20	22	6	6	3.5	2.2
	1/25	R7G-RGSF25C400P	100	50	78	80	90	90	70	62	17	3	12	19	30	M6	M6	M4	20	22	6	6	3.5	2.2
400 W	1/5	R7G-RGSF05C400P	89.5	50	78	80	90	90	70	62	17	3	12	19	30	M6	M6	M4	20	22	6	6	3.5	1.8
	1/9	R7G-RGSF09C400P	89.5	50	78	80	90	90	70	62	17	3	12	19	30	M6	M6	M4	20	22	6	6	3.5	1.8
	1/15	R7G-RGSF15C400P	100	50	78	80	90	90	70	62	17	3	12	19	30	M6	M6	M4	20	22	6	6	3.5	2.2
	1/25	R7G-RGSF25C400P	100	50	78	80	90	90	70	62	17	3	12	19	30	M6	M6	M4	20	22	6	6	3.5	2.2
750 W	1/5	R7G-RGSF05C750P	93.5	50	78	120	145	90	70	62	17	3	15	19	30	M8	M6	M4	20	22	6	6	3.5	2.5
	1/9	R7G-RGSF09C750P	93.5	50	78	120	145	90	70	62	17	3	15	19	30	M8	M6	M4	20	22	6	6	3.5	2.5
	1/15	R7G-RGSF15C750P	110	50	78	120	145	90	70	62	17	3	15	19	30	M8	M6	M4	20	22	6	6	3.5	2.9
	1/25	R7G-RGSF25C750P	110	50	78	120	145	90	70	62	17	3	15	19	30	M8	M6	M4	20	22	6	6	3.5	2.9

* "AT" in the table refers to the set bolt.

External Diagrams

上正科技有限公司
購買、維修 此手冊零組件
電話： 037-466333
Email: service@repairtw.com
Line id: @zzzz
www.repairtw.com

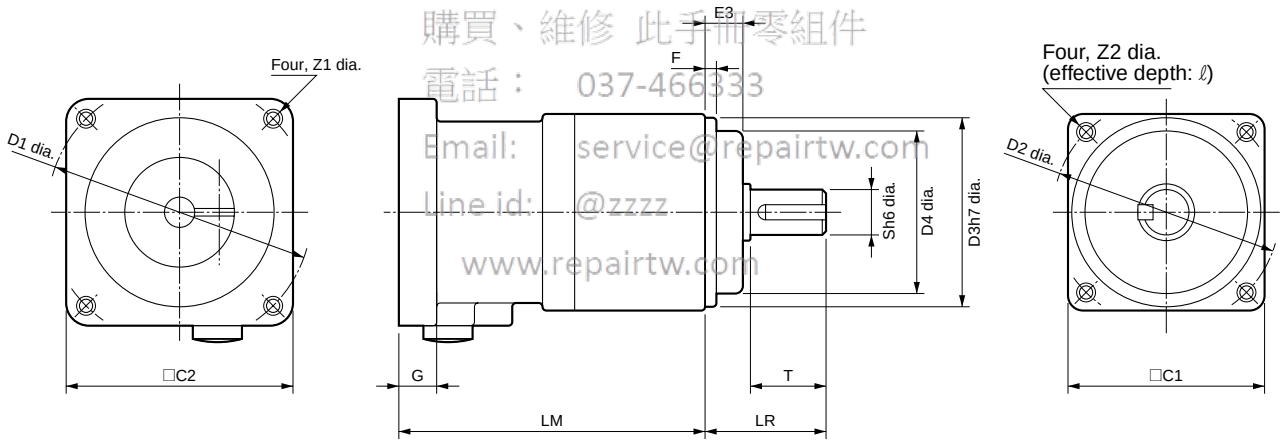

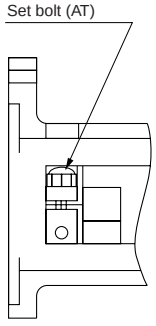

Key dimensions

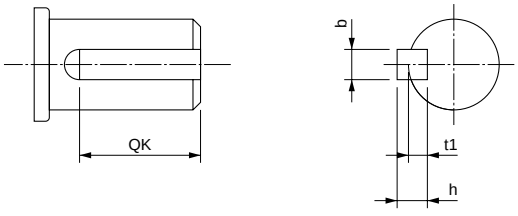

2-3 Servo Driver Specifications

■ SMARTSTEP A-series R7D-AP□ Servo Drivers

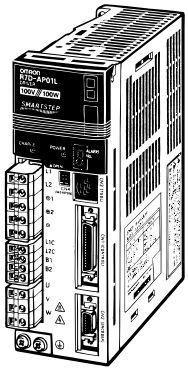

Select a Servo Driver to match the Servomotor to be used.

2-3-1 General Specifications

Item	Specifications
Ambient operating temperature	0 to 55°C
Ambient operating humidity	90% max. (with no condensation)
Ambient storage temperature	–20 to 85°C
Ambient storage humidity	90% max. (with no condensation)
Storage and operating atmosphere	No corrosive gasses.
Vibration resistance	10 to 55 Hz in X, Y, and Z directions with 0.1-mm double amplitude; acceleration: 4.9 m/s^2 max.
Impact resistance	Acceleration 19.6 m/s^2 max., in X, Y, and Z directions, three times
Insulation resistance	Between power line terminals and case: 0.5 MΩ min. (at 500 V DC)
Dielectric strength	Between power line terminals and case: 1,500 V AC for 1 min at 50/60 Hz Between each control signal and case: 500 V AC for 1 min
Protective structure	Built into panel (IP10).

上正有限公司
購買、維修、此手冊零組件
電話：037-466333
Email: service@repairtw.com
Line id: @2222
www.repairtw.com

Note 1. The above items reflect individual evaluation testing. The results may differ under compound conditions.

Note 2. Absolutely do not conduct a withstand voltage test with a Megger tester on the Servo Driver. If such tests are conducted, internal elements may be damaged.

Note 3. Depending on the operating conditions, some Servo Driver parts will require maintenance. Refer to *5-5 Periodic Maintenance* for details.

Note 4. The service life of the Servo Driver is 50,000 hours at an average ambient temperature of 40°C at 80% of the rated torque.

2-3-2 Performance Specifications

■ Control Specifications

● 100-V AC Input Type

Item		R7D-APA3L	R7D-APA5L	R7D-AP01L	R7D-AP02L	R7D-AP04L
Continuous output current (rms)		0.42 A	0.6 A	0.89 A	2.0 A	2.6 A
Momentary maximum output current (rms)		1.3 A	1.9 A	2.8 A	6.0 A	8.0 A
Input power supply	Main circuits	Single-phase 100/115 V AC (85 to 127 V) 50/60 Hz (double voltage method)				
	Control circuits	Single-phase 100/115 V AC (85 to 127 V) 50/60 Hz				
Heating value	Main circuits	3.1 W	4.6 W	6.7 W	13.3 W	20.0 W
	Control circuits	13 W	13 W	13 W	13 W	13 W
Control method		All-digital servo				
Speed feedback		2,000 pulses/revolution, incremental encoder				
Inverter method		PWM method based on IGBT				
PWM frequency		11.7 kHz				
Maximum applicable frequency (command pulse application)		250 kpps				
Weight		Approx. 0.8 kg	Approx. 0.8 kg	Approx. 0.8 kg	Approx. 0.8 kg	Approx. 1.1 kg
Applicable Servomotor wattage		30 W	50 W	100 W	200 W	400 W
Applicable Servomotor (R7M-)	Cylinder-style	A03030	A05030	A10030	A20030	A40030
	Flat-style	–	–	AP10030	AP20030	AP40030

上達科技有限公司
購買、維修 此手冊零組件
電話： 037-466333
Email: service@repairtw.com
Line id: @zzzz
www.repairtw.com

● 200-V AC Input Type (Single-phase Input)

Item		R7D-APA3H	R7D-APA5H	R7D-AP01H	R7D-AP02H	R7D-AP04H	R7D-AP08H
Continuous output current (rms)		0.42 A	0.6 A	0.89 A	2.0 A	2.6 A	4.4 A
Momentary maximum output current (rms)		1.3 A	1.9 A	2.8 A	6.0 A	8.0 A	13.9 A
Input power supply	Main circuits	Single-phase 200/230 V AC (170 to 253 V) 50/60 Hz (for R7D–AP08H only, three-phase input possible)					
	Control circuits	Single-phase 200/230 V AC (170 to 253 V) 50/60 Hz					
Heating value	Main circuits	3.1 W	4.6 W	6.7 W	13.3 W	20 W	47 W
	Control circuits	20 W	20 W	20 W	20 W	20 W	20 W
Control method		All-digital servo					

Item		R7D-APA3H	R7D-APA5H	R7D-AP01H	R7D-AP02H	R7D-AP04H	R7D-AP08H
Speed feedback		2,000 pulses/revolution, incremental encoder					
Inverter method		PWM method based on IGBT					
PWM frequency		11.7 kHz					
Maximum applicable frequency (command pulse application)		250 kpps					
Weight		Approx. 0.8 kg	Approx. 0.8 kg	Approx. 0.8 kg	Approx. 0.8 kg	Approx. 1.1 kg	Approx. 1.7 kg
Applicable Servomotor wattage		30 W	50 W	100 W	200 W	400 W	750 W
Applicable Servomotor (R7M-)	Cylinder-type	A03030	A05030	A10030	A20030	A40030	A75030
	Flat-type	–	–	AP10030	AP20030	AP40030	AP75030

2-3-3 Terminal Block Specifications

Signal	Function	Condition
L1 L2 L3	Main circuits power supply input	R7D–AP□H: Single-phase 200/230 V AC (170 to 253 V AC) 50/60 Hz R7D–AP□L: Single-phase 100/115 V AC (85 to 127 V AC) 50/60 Hz Note: Only the R7D–AP08H (750 W) has an L3 terminal, enabling three-phase input: Three-phase 200/230 V AC (170 to 253 V AC) 50/60 Hz
+1 +2	DC Reactor terminal for power supply harmonic control	Normally short-circuit between +1 and +2. If harmonic control measures are required, connect a DC Reactor between +1 and +2.
–	Main circuit DC output (Reverse)	Do not connect anything.
L1C L2C	Control circuits power supply input	R7D-AP□H: Single-phase 200/230 V AC (170 to 253 V AC) 50/60 Hz R7D-AP□L: Single-phase 100/115 V AC (85 to 127 V AC) 50/60 Hz
B1 B2 B3	External regeneration resistance connection terminals	30 to 200 W: No External Regeneration Resistor can be connected. 400 W: This terminal does not normally need to be connected. If regenerative energy is high, connect an External Regeneration Resistor between B1 and B2. 750 W: Normally shorted between B2 and B3. If there is high regenerative energy, remove the short bar between B2 and B3 and connect an External Regeneration Resistor between B1 and B2.
U V W ⏚	Servomotor connection terminals	Red White Blue Green/Yellow These are the terminals for outputs to the Servomotor. Be sure to wire these terminals correctly.
⏚	Frame ground	This is the ground terminal. Ground to a minimum of 100 Ω (class D, class 3).

台灣科技有限公司
專售 維修 工控產品
電話: 037-16002
Email: service@repairtw.com
Line id: @zzzz
www.repairtw.com

2-3-4 Control I/O Specifications (CN1)

■ Control I/O and External Signals for Position Control

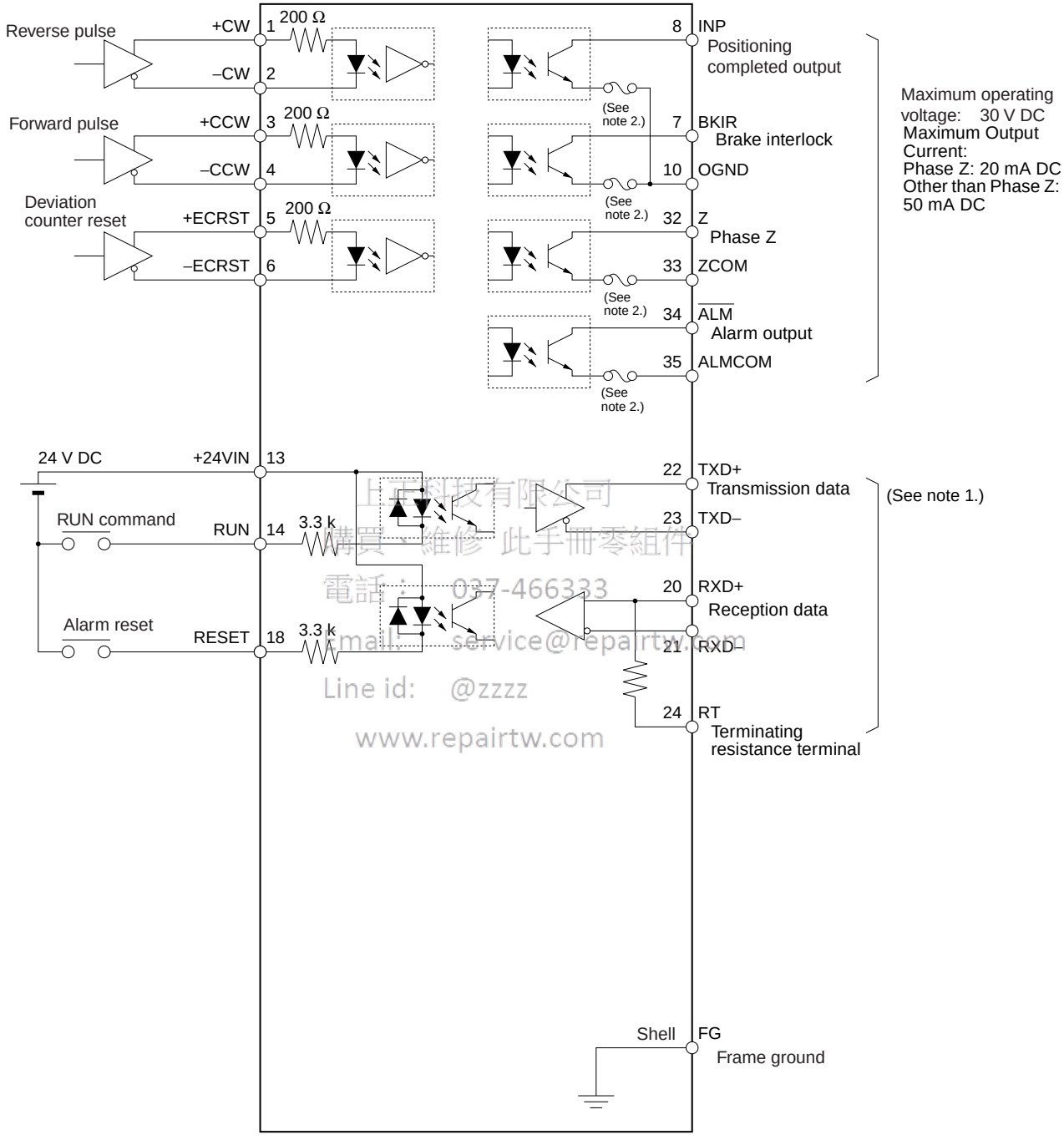

日商科技有限公司
購買、維修 此手冊零組件
電話： 037-466333
Email: service@repairtw.com
Line id: @zzzz
www.repairtw.com

Note 1. Interface for RS-422:

- Applicable line driver: T.I. SN75174, MC3487 or equivalent
- Applicable line receiver: T.I. SN75175, MC3486 or equivalent

Note 2. Automatic-reset fuses are used for output protection. If overcurrent causes the fuse to operate, current will not flow, and after a fixed period of time it will automatically reset.

■ Control I/O Signals

● CN1 Control Inputs

Pin No.	Signal name	Function	Contents
1	+PULS/CW/A	Feed pulses, reverse pulses, or 90° phase difference pulses (phase A)	Pulse string input terminals for position commands. Line-driver input: 7 mA at 3 V Maximum response frequency: 250 kpps Open-collector input: 7 to 15 mA Maximum response frequency: 250 kpps Any of the following can be selected by means of a Pn200.0 setting: feed pulses or direction signals (PULS/SIGN); forward or reverse pulses (CW/CCW); 90° phase difference (phase A/B) signals (A/B).
2	–PULS/CW/A		
3	+SIGN/CCW/B	Direction signal, forward pulses, or 90° phase difference pulses (phase B)	
4	–SIGN/CCW/B		
5	+ECRST	Deviation counter reset	Line-driver input: 7 mA at 3 V Open-collector input: 7 to 15 mA ON: Pulse commands prohibited and deviation counter cleared. **Note** Input for at least 20 μs.
6	–ECRST		
13	+24VIN	+24-V power supply input for control DC	Power supply input terminal (+24 V DC) for sequence inputs (pins 14 and 18).
14	RUN	RUN command input	ON: Servo ON (Starts power to Servomotor.)
18	RESET	Alarm reset input	ON: Servo alarm status is reset.

三正機械有限公司
購買、維修、電子郵件
電話： 037-466333
Email: service@repairtw.com
Line id: @zzzz
www.repairtw.com

● CN1 Control Outputs

Pin No.	Signal name	Function	Contents
32	Z	Phase Z output	Outputs the Encoder's phase Z. (1 pulse/revolution) Open collector output (maximum output voltage: 30 V DC max; maximum output current: 20 mA)
33	ZCOM		
34	$\overline{\text{ALM}}$	Alarm output	When the Servo Driver generates an alarm, the output turns OFF. Open collector output (maximum operating voltage: 30 V DC; maximum output current: 50 mA)
35	ALMCOM		
7	BKIR	Brake interlock output	Outputs the holding brake timing signals.
8	INP	Positioning completed output	ON when the position error is within the positioning completed range (Pn500).
10	OGND	Output ground common	Ground common for sequence outputs (pins 7 and 8).

Note An open-collector output interface is used for pin-7 and -8 sequence outputs. (Maximum operating voltage: 30 V DC; maximum output current: 50 mA)

● Interface for RS-422

Pin No.	Signal name	Function	Contents
20	RXD+	Reception data	Interface for RS-422A transmission and reception.
21	RXD–		
22	TXD+	Transmission data	
23	TXD–		
24	RT	Terminating resistance terminal	Connect to pin 21 (RXD–) on the end Unit.
19	GND	RS-422A ground	Ground for RS-422A.

■ CN1: Pin Arrangement

			1	+PULS /+CW/+A	+ feed pulse, + reverse pulse, + phase A				19	GND	Ground for RS-422A
2	–PULS /–CW/–A	– feed pulse, – reverse pulse, – phase A				20	RXD+	Reception data +			
			3	+SIGN /+CCW/+B	+ direction signal, + forward pulse, + phase B				21	RXD–	Reception data –
4	–SIGN /–CCW /–B	– direction signal, – forward pulse, – phase B				22	TXD+	Transmission data +			
			5	+ECRST	+ deviation counter reset				23	TXD–	Transmission data –
6	–ECRST	Deviation counter reset				24	RT	Terminating resistance terminal			
			7	BKIR	Brake interlock output				25		
8	INP	Positioning completed output				26					
			9						27		
10	OGND	Output ground common				28					
			11						29		
12						30					
			13	+24VIN	Control DC +24-V input				31		
14	RUN	RUN command input				32	Z	Encoder phase-Z output			
			15						33	ZCOM	Phase-Z output ground
16						34	$\overline{\text{ALM}}$	Alarm output			
			17						35	ALMCOM	Alarm output ground
18	RESET	Alarm reset input				36					

上立科技有限公司
購買、維修 此手冊零組件
電話： 037-466333
Email: service@repairtw.com
Line id: @zzzz
www.repairtw.com

Note Do not wire the empty pins.

● CN1 Connectors (36P)

Servo Driver receptacle	10236-52A2JL (Sumitomo 3M)
Cable solder plug	10136-3000VE (Sumitomo 3M)
Cable case	10336-52A0-008 (Sumitomo 3M)

■ Control Input Circuits

● Position Command Pulse Inputs and Deviation Counter Reset Inputs

Line Driver Input

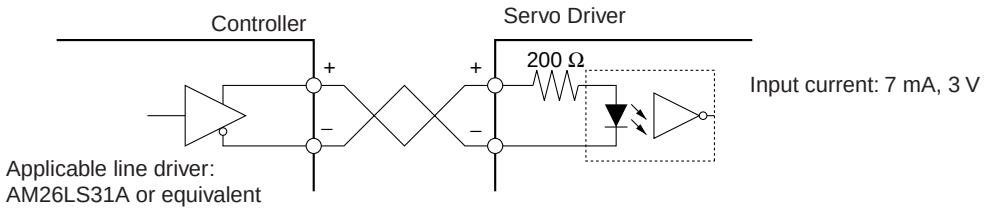

Open Collector Input

Using External Power Supply

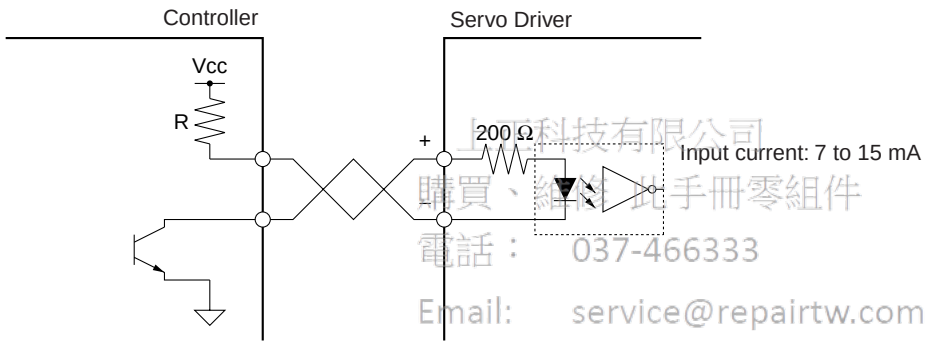

[ ]科技有限公司
購買、維修此手冊零組件
電話： 037-466333
Email: service@repairtw.com
Line id: @zzzz
www.repairtw.com

Note Select a value for resistance R so that the input current will be from 7 to 15 mA.

Vcc	R
24 V	1.6 to 2.4 kΩ
12 V	750 to 1.1 kΩ
5 V	None

● Sequence Inputs

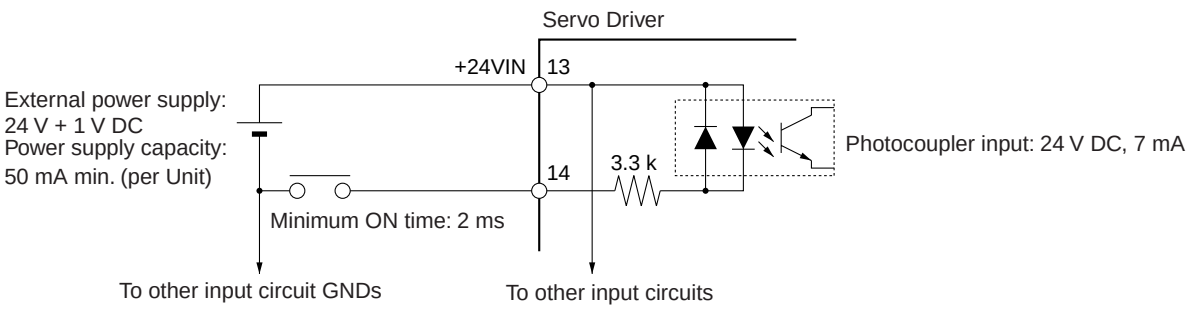

Signal Levels ON level: Minimum (+24VIN-11) V
OFF level: Maximum (+24VIN-1) V

■ Control Output Circuits

● Sequence and Alarm Outputs

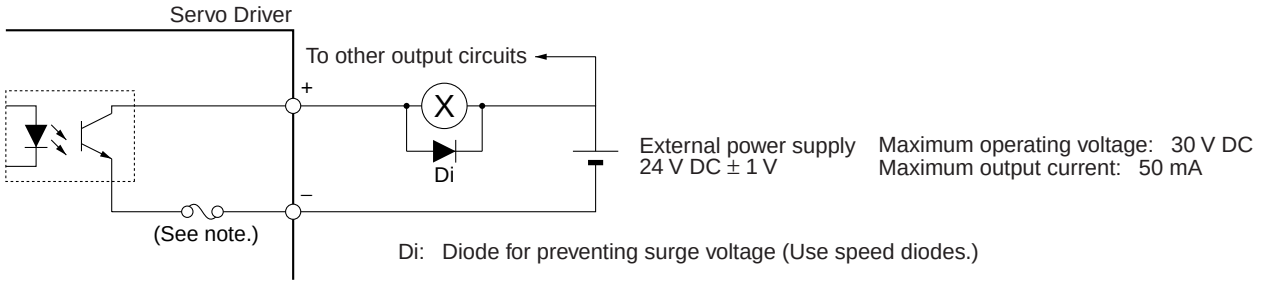

Note Automatic-reset fuses are used for output protection. If overcurrent causes the fuse to operate, current will not flow, and after a fixed period of time it will automatically reset.

● Phase-Z Output

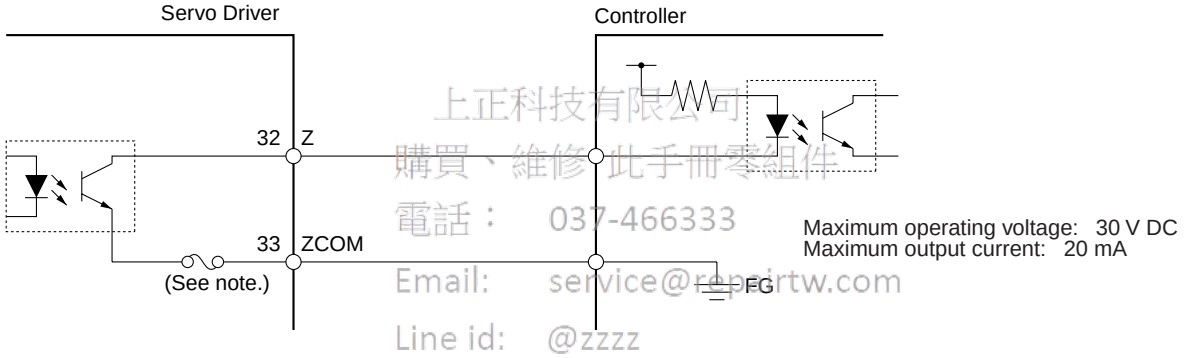

上正科技有限公司
購買、維修此手冊零組件
電話： 037-466333
Email: service@repairtw.com
Line id: @zzzz
www.repairtw.com

Note Automatic-reset fuses are used for output protection. If overcurrent causes the fuse to operate, current will not flow, and after a fixed period of time it will automatically reset.

■ Control Input Details

● Feed Pulse/Direction Signal, Reverse Pulse/Forward Pulse, +90° Phase Difference Signals (Phase A/Phase B)

CN1 Pin Numbers

CN1 pin 1:
+Feed Pulse (+PULS), +Reverse Pulse (+CW), +90° Phase Difference Signals (Phase A) (+A)
CN1 pin 2:
–Feed Pulse (–PULS), –Reverse Pulse (–CW), –90° Phase Difference Signals (Phase A) (–A)
CN1 pin 3:
+Direction Signal (+SIGN), +Forward Pulse (+CCW), +90° Phase Difference Signals (Phase B) (+B)
CN1 pin 4:
–Direction Signal (–SIGN), –Forward Pulse (–CCW), –90° Phase Difference Signals (Phase B) (–B)

Functions

The function of these signals depends on the setting of Pn200.0 (command pulse mode: position control setting 1).

卓正科技有限公司
購買、維修 此手冊零組件
電話: 037-466333
Email: service@repairtw.com
Line id: @zzzz
www.repairtw.com

Logic	Pn200.0 setting	Command pulse mode	Input pins	Servomotor forward command	Servomotor reverse command
Positive	0	Feed pulse and direction signal	1: +PULS 2: –PULS 3: +SIGN 4: –SIGN	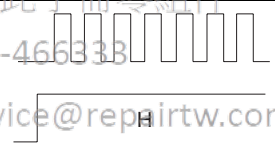	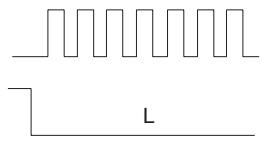
	1	Reverse pulse and forward pulse	1: +CW 2: –CW 3: +CCW 4: –CCW	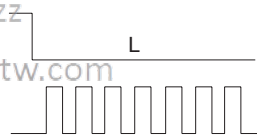	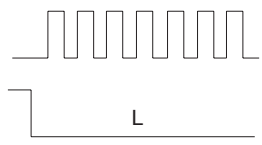
	2	90° phase difference signals (×1)	1: +A 2: –A 3: +B 4: –B	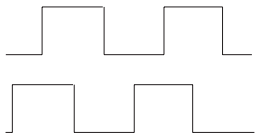	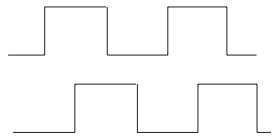
	3	90° phase difference signals (×2)			
	4	90° phase difference signals (×4)			

Logic	Pn200.0 setting	Command pulse mode	Input pins	Servomotor forward command	Servomotor reverse command
Negative	5	Feed pulse and direction signal	1: +PULS 2: –PULS 3: +SIGN 4: –SIGN	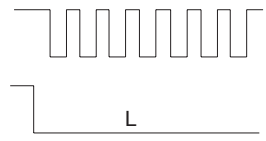	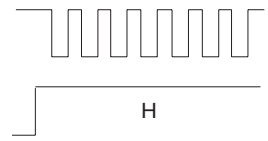
	6	Reverse pulse and forward pulse	1: +CW 2: –CW 3: +CCW 4: –CCW	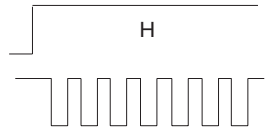	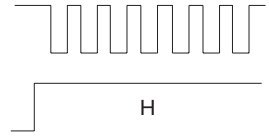
	7	90° phase difference signals (×1)	1: +A 2: –A 3: +B 4: –B	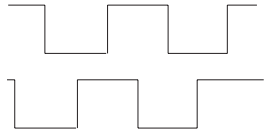	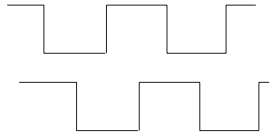
	8	90° phase difference signals (×2)			
	9	90° phase difference signals (×4)			

上正科技有限公司
購買、維修 此手冊零組件
電話： 037-466333
Email: service@repairtw.com
Line id: @zzzz
www.repairtw.com

Command Pulse Timing

The following wave forms are for positive logic. Conditions are the same for negative logic.

Command pulse mode	Timing
Feed pulse and direction signal Maximum input frequency: 250 kpps	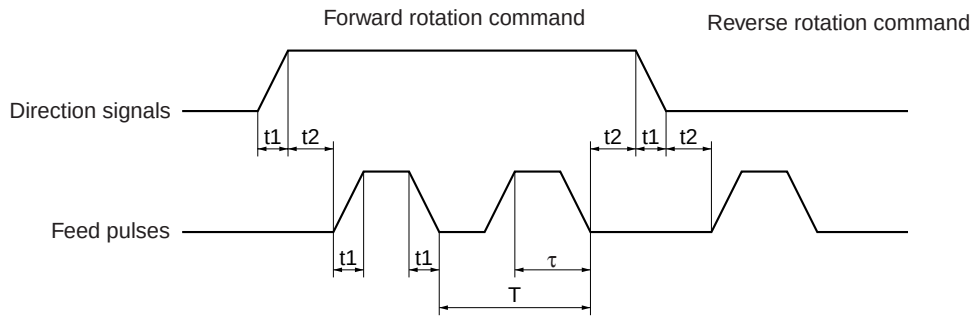 t1 ≤ 0.1 µs t2 > 3.0 µs τ ≥ 2.0 µs T ≥ 4.0 µs (τ/T) × 100 ≤ 50 (%)
Reverse pulse and forward pulse Maximum input frequency: 250 kpps	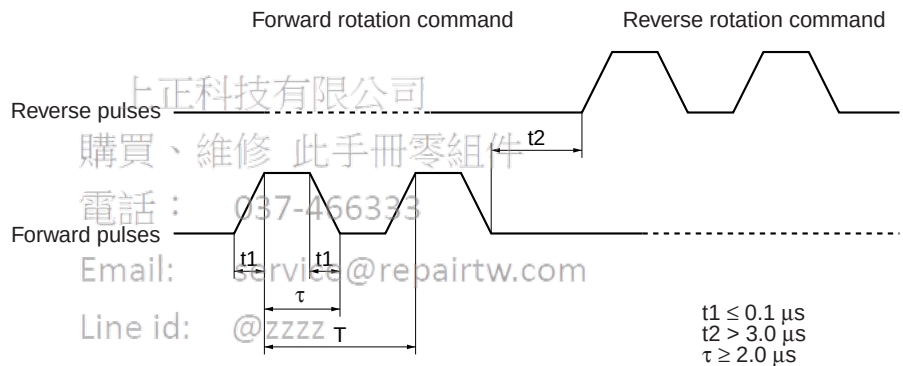 t1 ≤ 0.1 µs t2 > 3.0 µs τ ≥ 2.0 µs T ≥ 4.0 µs (τ/T) × 100 ≤ 50 (%)
90° phase difference signals Maximum input frequency: ×1: Line driver: 250 kpps ×2: Line driver: 250 kpps ×4: Line driver: 187.5 kpps	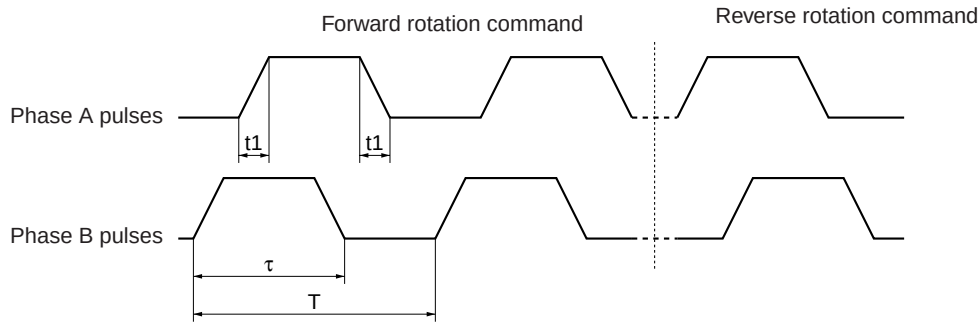 t1 ≤ 0.1 ms τ ≥ 2.0 ms T ≥ 4.0 ms (τ/T) × 100 ≤ 50 (%)

上正科技有限公司
購買、維修 此手冊零組件
電話： 037-466333
Email: service@repairtw.com
Line id: @zzzz
www.repairtw.com

● + Deviation Counter Reset (5: +ECRST)
– Deviation Counter Reset (6: –ECRST)

The content of the deviation counter will be reset when the deviation counter reset signal turns ON and the position loop will be disabled. Input the reset signal for 20 µs minimum. The counter will not be reset if the signal is too short.

● RUN Command Input (14: RUN)

This is the input that turns ON the power drive circuit for the main circuit of the Servo Driver. If this signal is not input (i.e., servo-OFF status), the Servomotor cannot operate except for JOG operations.

● Alarm Reset (18: RESET)

This is the external reset signal input for the alarm. Remove the cause of the alarm and then restart operation. Turn OFF the RUN command before inputting the reset signal. It can be dangerous to input the reset signal while the RUN command is ON.

■ Control Output Details

● Control Output Sequence

上正科技有限公司
購買、維修 此手冊零組件
電話： 037-466333
Email: service@repairtw.com
Line id: @zzzz
www.repairtw.com

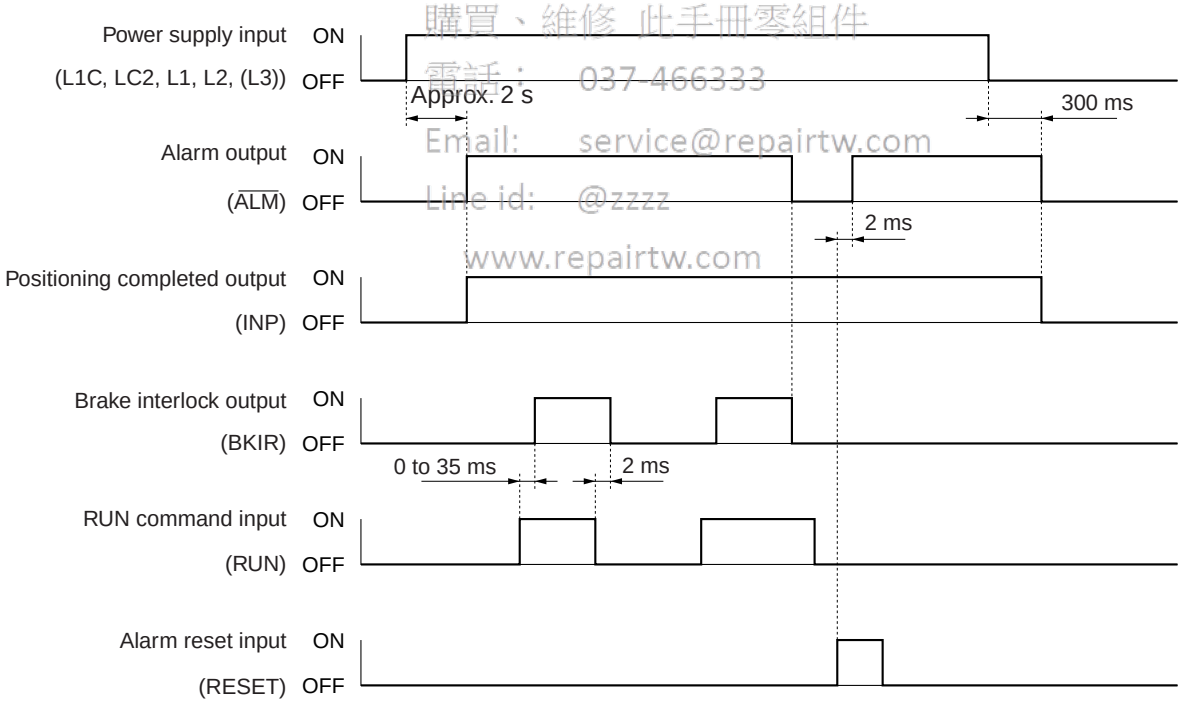

● Alarm Output (34: $\overline{\text{ALM}}$)
Alarm Output Ground (35: ALMCOM)

When the Servo Driver detects an error, outputs are turned OFF. This output is OFF at the time of powering up, and turns ON when the initial processing is completed.

● Positioning Completed Output (8: INP)

The INP signal turns ON when the number of accumulated pulses in the deviation counter is less than Pn500 (positioning completed range).

● Brake Interlock Output (7: BKIR)

External brake timing signals are output.

2-3-5 Encoder Input Connector Specifications (CN2)

Pin No.	Symbol	Signal name	Function/Interface
1, 2, 3	E0V	Encoder power supply GND	Power supply outlet for encoder: 5 V, 180 mA
4, 5, 6	E5V	Encoder power supply +5 V	
8	S+	Encoder + phase-S input	Line driver input (conforming to EIARS-422A) (Input impedance: 300 Ω±5%)
9	S–	Encoder – phase-S input	
10	A+	Encoder + phase-A input	Line driver input (conforming to EIARS-422A) (Input impedance: 300 Ω±5%)
11	A–	Encoder – phase-A input	
12	B+	Encoder + phase-B input	Line driver input (conforming to EIARS-422A) (Input impedance: 300 Ω±5%)
13	B–	Encoder – phase-B input	
Shell	FG	Shield ground	Cable shield ground

上誠科技有限公司
購買、維修 此手冊零組件
電話： 037-466333
E-mail: service@repairtw.com
Line id: @7777
www.repairtw.com

● CN2 Connectors Used (14P)

Servo Driver receptacle: 10214-52A2JL (Sumitomo 3M)
Cable solder plug: 10114-3000VE (Sumitomo 3M)
Cable case: 10314-52A0-008 (Sumitomo 3M)

2-3-6 Communications Connector Specifications (CN3)

Pin No.	Symbol	Signal name	Function/Interface
1	/TXD	Transmission data	Transmission data, RS-232C output
2	/RXD	Reception data	Reception data, RS-232C input
3	PRMU	Unit switching	This is the switching terminal for a Parameter Unit or personal computer.
7	+5V	+5 V output	This is the +5-V power supply output to the Parameter Unit.
8	GND	Ground	
Shell	FG	Shield ground	Cable shield ground

● CN3 Connectors Used (8P)

Servo Driver receptacle: HR12-10R-8 SDL (Hirose Electric)
Cable connector: HR212-10P-8P (Hirose Electric)

2-3-7 Monitor Output Connector Specifications (CN4)

Pin No.	Symbol	Signal name	Function/Interface
1	NM	Speed monitor	Speed monitor output: 1 V per 1,000 r/min Forward rotation: – voltage; reverse rotation: + voltage The output accuracy is approximately ±15%.
2	AM	Current monitor	Current monitor output: 1 V / rated torque Forward rotation: – voltage; reverse rotation: + voltage The output accuracy is approximately ±15%.
3	GND	Monitor ground	Grounds for monitor output
4	GND	Monitor ground	

● CN4 Connectors Used (4P)

Servo Driver receptacle: DF11-4DP-2DSA (01) (Hirose Electric)
Cable connector socket: DF11-4DS-2C (Hirose Electric)
Cable connector contact: DF11-2428SCF (Hirose Electric)

上正科技有限公司
購買、維修 此手冊零組件
電話： 037-466333
Email: service@repairtw.com
Line id: @zzzz
www.repairtw.com

2-4 Servomotor Specifications

■ SMARTSTEP A-series Servomotors (R7M-A□)

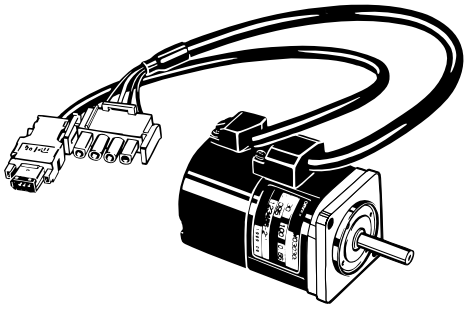

There are two kinds of SMARTSTEP A-series Servomotor:

- 3,000-r/min Cylinder-style Servomotors
- 3,000-r/min Flat-style Servomotors

These Servomotors also have optional specifications, such as the shaft type, brake, etc. Select the appropriate Servomotor for your system according to the load conditions and installation environment.

2-4-1 General Specifications

Item	Specification
Ambient operating temperature	0 to 40°C
Ambient operating humidity	20% to 80% (with no condensation)
Storage ambient temperature	–20 to 60°C
Ambient storage temperature	20% to 80% (with no condensation)
Storage and operating atmosphere	No corrosive gasses.
Vibration resistance (See note 1.)	10 to 2,500 Hz, 0.2-mm double amplitude or 24.5 m/s^2 max. acceleration, whichever is smallest, in X, Y, and Z directions.
Impact resistance	Acceleration 98 m/s^2 max., in X, Y, and Z directions, two times
Insulation resistance	Between power line terminals and FG: 10 MΩ min. (via 500-V DC Megger Tester)
Dielectric strength	Between power line terminals and FG: 1,500 V AC for 1 min at 50/60 Hz
Run position	All directions
Insulation grade	Type B
Structure	Totally-enclosed self-cooling
Protective structure	IP55 (Excluding through-shaft portion)
Vibration grade	V-15
Mounting method	Flange-mounting

上立科技有限公司
購買、維修 此手冊零組件
電話： 037-466333
Email： service@repairtw.com
www.repairtw.com

Note 1. Vibration may be amplified due to sympathetic resonance of machinery, so use the Servomotor Driver under conditions that will not exceed 80% of the specification values over a long period of time.

Note 2. The above items reflect individual evaluation testing. The results may differ under compound conditions.

Note 3. The Servomotors cannot be used in misty environments.

2-4-2 Performance Specifications

■ 3,000-r/min Cylinder-style Servomotors

Item	Unit	R7M-A03030	R7M-A05030	R7M-A10030	R7M-A20030	R7M-A40030	R7M-A75030
Rated output*	W	30	50	100	200	400	750
Rated torque*	N·m	0.095	0.159	0.318	0.637	1.27	2.39
Rated rotation speed	r/min	3,000					
Momentary maximum rotation speed	r/min	4,500					
Momentary maximum torque*	N·m	0.29	0.48	0.96	1.91	3.82	7.1
Rated current*	A (rms)	0.42	0.60	0.89	2.0	2.6	4.4
Momentary maximum current*	A (rms)	1.3	1.9	2.8	6.0	8.0	13.9
Rotor inertia	kg·m^2 (GD^2/4)	1.7×10^{-6}	2.2×10^{-6}	3.6×10^{-6}	1.19×10^{-5}	1.87×10^{-5}	6.67×10^{-5}
Torque constant*	N·m/A	0.255	0.286	0.408	0.355	0.533	0.590
Induced voltage constant*	mV/ (r/min)	8.89	9.98	14.0	12.4	18.6	20.6
Power rate*	kW/s	5.31	11.5	28.1	34.1	86.3	85.6
Mechanical time constant	ms	1.2	0.8	0.5	0.4	0.2	0.3
Winding resistance	Ω	15.8	9.64	6.99	1.34	1.23	0.45
Winding inductance	mH	23.1	16.9	13.2	7.2	7.9	5.7
Electrical time constant	ms	1.5	1.8	1.9	5.4	6.4	13
Allowable radial load	N	68	68	78	245	245	392
Allowable thrust load	N	54	54	54	74	74	147
Weight: Without brake	kg	Approx. 0.3	Approx. 0.4	Approx. 0.5	Approx. 1.1	Approx. 1.7	Approx. 3.4
Weight: With brake	kg	Approx. 0.6	Approx. 0.7	Approx. 0.8	Approx. 1.6	Approx. 2.2	Approx. 4.3
Radiation shield dimensions (material)		t6 × □250 mm (Al)					
Applicable Servo Driver (R7D-)	100 VAC	APA3L	APA5L	AP01L	AP02L	AP04L	–
	200 VAC	APA3H	APA5H	AP01H	AP02H	AP04H	AP08H

上正科技有限公司
購買、維修 此手冊零組件
電話：037-483333
Email: service@repairtw.com
Line id: @zzzz
www.repairtw.com

Item		Unit	R7M-A03030	R7M-A05030	R7M-A10030	R7M-A20030	R7M-A40030	R7M-A75030
Brake specifications	Brake inertia	kg·m^2 (GD^2/4)	8.5×10^{-7}	8.5×10^{-7}	8.5×10^{-7}	6.4×10^{-6}	6.4×10^{-6}	1.71×10^{-5}
	Excitation voltage	V	24 V DC ±10%					
	Power consumption (at 20°C)	W	6	6	6	7	7	7.7
	Current consumption (at 20°C)	A	0.25	0.25	0.25	0.29	0.29	0.32
	Static friction torque	N·m	0.2 min.	0.2 min.	0.34 min.	1.47 min.	1.47 min.	2.45 min.
	Attraction time (See note 3.)	ms	30 max.	30 max.	30 max.	60 max.	60 max.	60 max.
	Release time (See note 3.)	ms	60 max.	60 max.	60 max.	20 max.	20 max.	20 max.
	Backlash		1° (reference value)					
	Rating	–	Continuous					
	Insulation grade	–	Type F					

上正科技有限公司
購買、維修、加工、制造專業廠商
電話： 037-466333
Email: service@repairtw.com
Line id: @777
www.repairtw.com

Note 1. *The values for items marked by asterisks are the values at an armature winding temperature of 100°C, combined with the Servo Driver. Other values are at normal conditions (20°C, 65%). The momentary maximum torque shown above indicates the standard value.

Note 2. The brakes are the non-excitation operation type (released when excitation voltage is applied).

Note 3. The operation time is the measured value (reference value) with a surge killer (CR50500, by Okaya Electric Industries co. LTD) inserted.

Note 4. The allowable radial and thrust loads are the values determined for a service life of 20,000 hours at normal operating temperatures.

Note 5. The value indicated for the allowable radial load is for the positions shown in the diagrams following the next table.

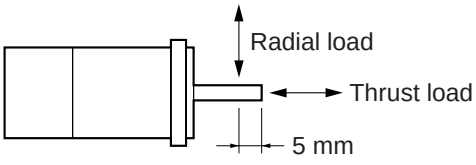

● 3,000-r/min Cylinder-style Servomotors: Torque and Rotation Speed Characteristics

The following graphs show the characteristics with a 3-m standard cable, and a 100-V AC input for R7D-AP□L Servo Drivers, or a 200-V AC input for R7D-AP□H Servo Drivers.

R7M-A03030 (30 W)

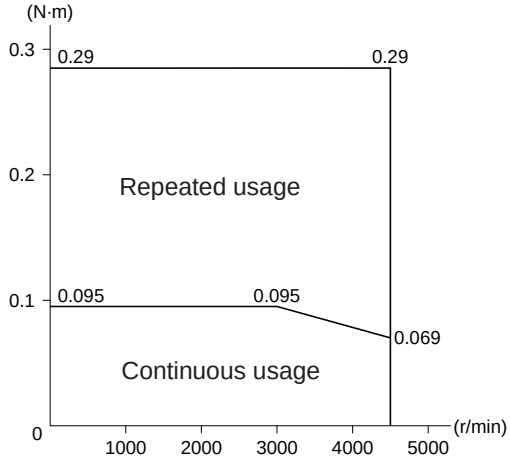

R7M-A05030 (50 W)

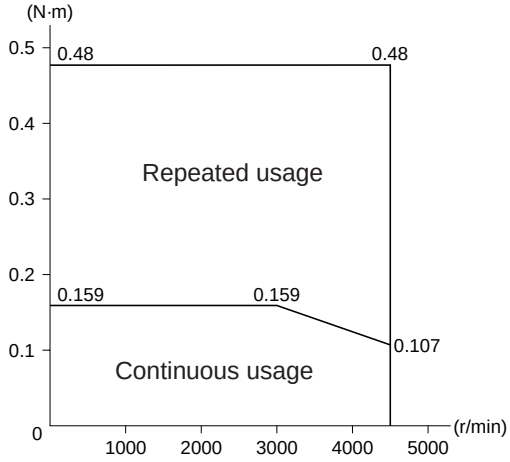

R7M-A10030 (100 W)

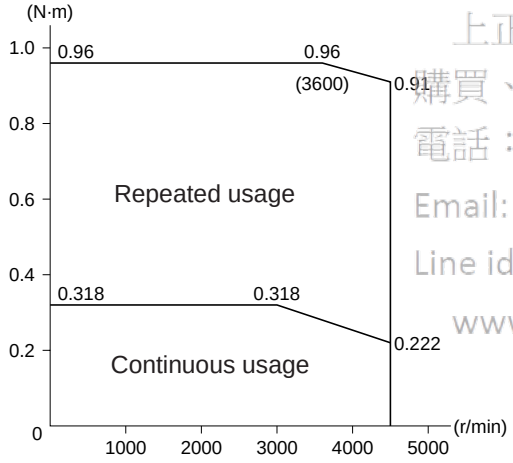

R7M-A20030 (200 W)

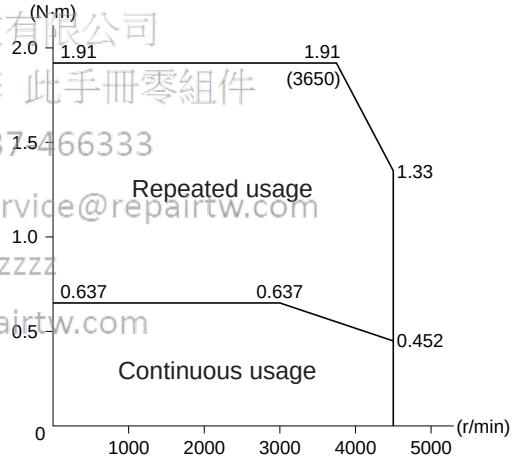

上正科技有限公司
購買、維修 此手冊零組件
電話： 037466333
Email: service@repairtw.com
Line id: @zzzz
www.repairtw.com

R7M-A40030 (400 W)

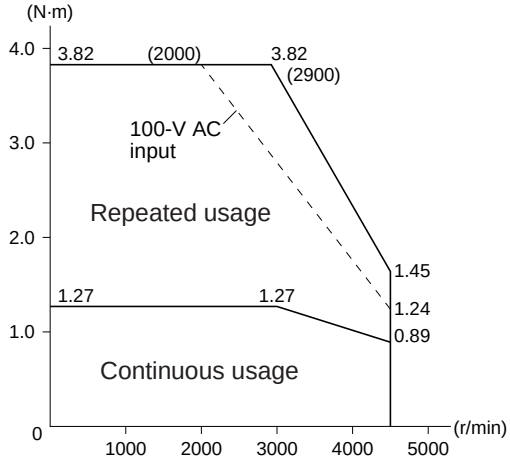

R7M-A75030 (750 W)

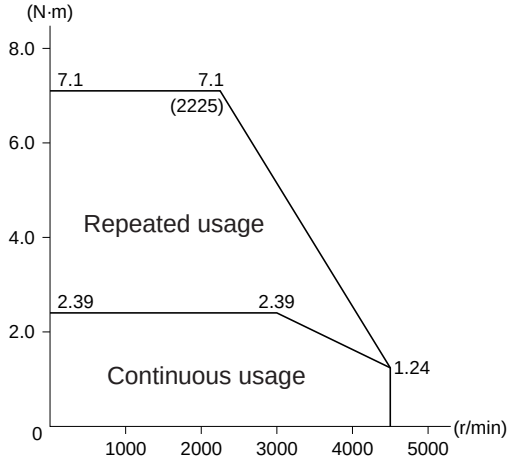

■ 3,000-r/min Flat-style Servomotors

Item		Unit	R7M-AP10030	R7M-AP20030	R7M-AP40030	R7M-AP75030
Rated output*		W	100	200	400	750
Rated torque*		N·m	0.318	0.637	1.27	2.39
Rated rotation speed		r/min	3,000			
Momentary maximum rotation speed		r/min	4,500			
Momentary maximum torque*		N·m	0.96	1.91	3.82	7.1
Rated current*		A (rms)	0.89	2.0	2.6	4.1
Momentary maximum current*		A (rms)	2.8	6.0	8.0	13.9
Rotor inertia		kg·m^2 (GD^2/4)	6.5×10^{-6}	2.09×10^{-5}	3.47×10^{-5}	2.11×10^{-4}
Torque constant*		N·m/A	0.392	0.349	0.535	0.641
Induced voltage constant*		mV/ (r/min)	13.7	12.2	18.7	22.4
Power rate*		kW/s	15.7	19.4	46.8	26.9
Mechanical time constant		ms	0.7	0.6	0.4	0.7
Winding resistance		Ω	5.53	1.13	1.04	0.43
Winding inductance		mH	20.7	8.4	8.9	7.7
Electrical time constant		ms	3.7	7.4	8.5	18
Allowable radial load		N	78	245	245	392
Allowable thrust load		N	49	68	68	147
Weight	Without brake	kg	Approx. 0.7	Approx. 1.4	Approx. 2.1	Approx. 4.2
	With brake	kg	Approx. 0.9	Approx. 1.9	Approx. 2.6	Approx. 5.7
Radiation shield dimensions (material)			t6 × □250 mm (Al)			t12 × □300 mm (Al)
Applicable Servo Driver (R7D-)		100 VAC	AP01L	AP02L	AP04L	–
		200 VAC	AP01H	AP02H	AP04H	AP08H
Brake specifications	Brake inertia	kg·m^2 (GD^2/4)	2.9×10^{-6}	1.09×10^{-5}	1.09×10^{-5}	8.75×10^{-5}
	Excitation voltage	V	24 V DC ±10%			
	Power consumption (at 20°C)	W	6	5	7.6	7.5
	Current consumption (at 20°C)	A	0.25	0.21	0.32	0.31
	Static friction torque	N·m	0.4 min.	0.9 min.	1.9 min.	3.5 min.
	Attraction time (See note 3.)	ms	40 max.	40 max.	40 max.	40 max.
	Release time (See note 3.)	ms	20 max.	20 max.	20 max.	20 max.
	Backlash		1° (reference value)			
	Rating	–	Continuous			
	Insulation grade	–	Type F			

上正科技有限公司
購買、維修、此產品零組件
電話： 037-466333
Email: service@repairtw.com
Line Id: @zzzz
www.repairtw.com

Note 1. *The values for items marked by asterisks are the values at an armature winding temperature of 100°C, combined with the Servo Driver. Other values are at normal conditions (20°C, 65%). The momentary maximum torque shown above indicates the standard value.

Note 2. The brakes are the non-excitation operation type (released when excitation voltage is applied).

Note 3. The operation time is the measured value (reference value) with a surge killer (CR50500, by Okaya Electric Industries co. LTD) inserted.

Note 4. The allowable radial and thrust loads are the values determined for a service life of 20,000 hours at normal operating temperatures.

Note 5. The value indicated for the allowable radial load is for the position shown in the following diagram.

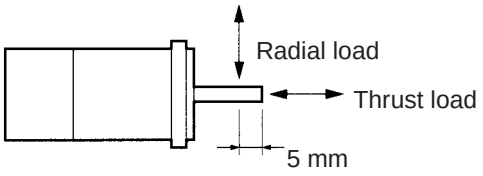

上正科技有限公司
購買、維修 此手冊零組件
電話： 037-466333
Email: service@repairtw.com
Line id: @zzzz
www.repairtw.com

3,000-r/min Flat-style Servomotors: Torque and Rotation Speed Characteristics

The following graphs show the characteristics with a 3-m standard cable, and a 100-V AC input for R7D-AP□L Servo Drivers, or a 200-V AC input for R7D-AP□H Servo Drivers.

R7M-AP10030 (100 W)

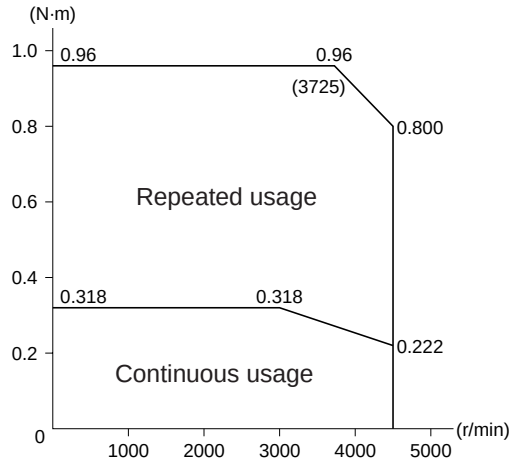

R7M-AP20030 (200 W)

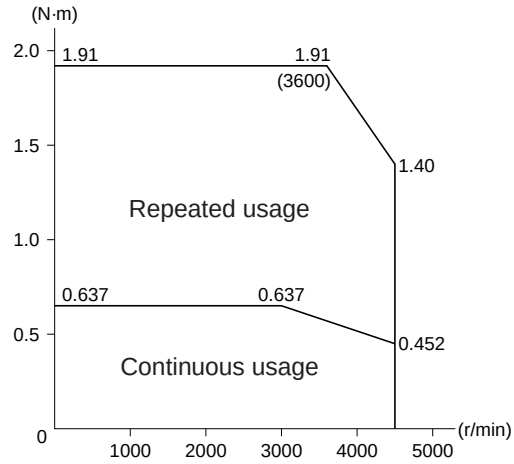

上正科技有限公司
購買、維修 此手冊零組件
電話： 037-466333
Email: service@repairtw.com
Line id: @zzzz
www.repairtw.com

R7M-AP40030 (400 W)

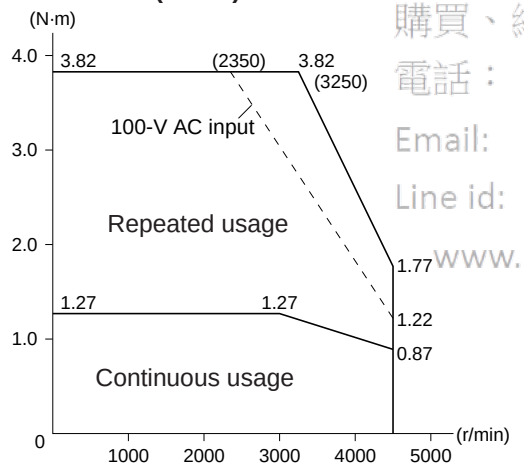

R7M-AP75030 (750 W)

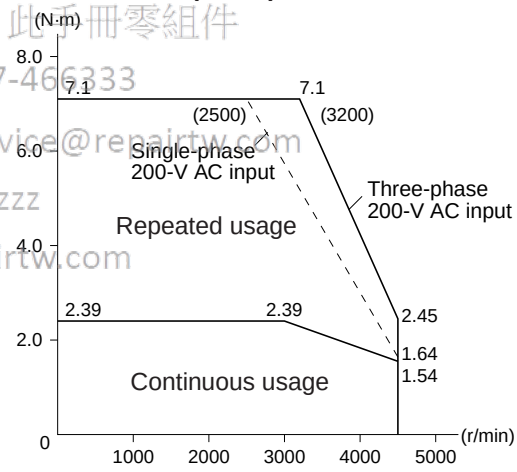

● Servomotor and Mechanical System Temperature Characteristics

- SMARTSTEP A-series Servomotors use rare earth magnets (neodymium-iron magnets). The temperature coefficient for these magnets is approximately –0.13%/°C. As the temperature drops, the Servomotor's momentary maximum torque increases, and as the temperature rises the Servomotor's momentary maximum torque decreases. When the normal temperature of 20°C and –10°C are compared, the momentary maximum torque increases by approximately 4%. Conversely, when the magnet warms up to 80°C from the normal temperature of 20°C, the momentary maximum torque decreases by approximately 8%.
- Generally, in a mechanical system, when the temperature drops the friction torque increases and the load torque becomes larger. For that reason, overloading may occur at low temperatures. In particular, in systems which use reduction gear, the load torque at low temperatures may be nearly twice the load torque at normal temperatures. Check with a current monitor to see whether overloading is occurring at low temperatures, and how much the load torque is. Likewise, check to see whether there abnormal Servomotor overheating or alarms are occurring at high temperatures.
- An increase in load friction torque visibly increases load inertia. Therefore, even if the Servo Driver parameters are adjusted at a normal temperature, there may not be optimal operation at low temperatures. Check to see whether there is optimal operation at low temperatures too.

2-4-3 Encoder Specifications

上可科技有限公司
購買、維修 此手冊零組件
電話： 03/-466333
Email: service@repairtw.com
Line ID: @repairtw
www.repairtw.com

Item	Specification	
	Cylinder-style Servomotors	Flat-style Servomotors
Encoder method	Optical encoder (incremental)	Magnetic encoder (incremental)
Number of output pulses	Phase A, B: 2,000 pulses/revolution Phase Z: 1 pulse/revolution	
Power supply voltage	5 V DC±5%	
Power supply current	150 mA max.	
Maximum rotation speed	4,500 r/min	
Output signals	+A, –A, +B, –B, +S, –S	
Output interface	Conforming to EIA RS-422A. Output based on AM26LS31CN or equivalent.	
Serial communications data	Phase Z, poll sensor, phases U, V, W	
Serial communications method	Combined communications method using phases A, B, and S.	

2-5 Reduction Gear Specifications

■ Reduction Gears for SMARTSTEP A-series Servomotors (R7G-□)

There are two kinds of reduction gears for SMARTSTEP A-series Servomotors:

- Reduction gears for 3,000-r/min Cylinder-style Servomotors
  (Backlash 3′ max. and backlash 45′ max.)
- Reduction gears for 3,000-r/min Flat-style Servomotors
  (Backlash 3′ max. and backlash 45′ max.)

There are four reduction ratios: 1/5, 1/9, 1/15, and 1/25. Select a reduction ratio to match the capacity of the Servomotor.

Note There are no 30-W reduction gears for Cylinder-style Servomotors.

■ Reduction Gears for Cylinder-style Servomotors

● Backlash = 3′ Max.

Model			Rated rotation speed	Rated torque	Ratio	Maximum momentary rotation speed	Maximum momentary torque	Reduction gear inertia	Allowable radial torque	Allowable thrust torque
			r/min	N·m	%	r/min	N·m	kg·m²	N	N
50 W	1/5	R7G-VRSFPB05B50	600	0.517	65	900	1.56	4.13×10^{-6}	392	196
	1/9	R7G-VRSFPB09B50	333	0.93	65	500	2.81	3.53×10^{-6}	441	220
	1/15	R7G-VRSFPB15B50	200	1.67	70	300	5.04	3.67×10^{-6}	588	294
	1/25	R7G-VRSFPB25B50	120	2.78	70	180	8.40	3.59×10^{-6}	686	343
100 W	1/5	R7G-VRSFPB05B100	600	1.19	75	900	3.60	4.08×10^{-6}	392	196
	1/9	R7G-VRSFPB09B100	333	2.29	80	500	6.91	3.43×10^{-6}	441	220
	1/15	R7G-VRSFPB15B100	200	3.82	80	300	11.5	3.62×10^{-6}	588	294
	1/25	R7G-VRSFPB25C100	120	6.36	80	180	19.2	3.92×10^{-6}	1323	661
200 W	1/5	R7G-VRSFPB05B200	600	2.71	85	900	8.12	1.53×10^{-5}	392	196
	1/9	R7G-VRSFPB09C400	333	3.78	66	500	11.3	2.68×10^{-5}	931	465
	1/15	R7G-VRSFPB15C400	200	6.31	66	300	18.9	2.71×10^{-5}	1176	588
	1/25	R7G-VRSFPB25C200	120	11.1	70	180	33.4	2.67×10^{-5}	1323	661
400 W	1/5	R7G-VRSFPB05C400	600	5.40	85	900	16.2	3.22×10^{-5}	784	392
	1/9	R7G-VRSFPB09C400	333	9.49	83	500	28.5	2.68×10^{-5}	931	465
	1/15	R7G-VRSFPB15C400	200	15.8	83	300	47.6	2.71×10^{-5}	1176	588
	1/25	R7G-VRSFPB25D400	120	26.4	83	180	79.3	2.79×10^{-5}	1617	808
750 W	1/5	R7G-VRSFPB05C750	600	10.8	90	900	32.0	7.17×10^{-5}	784	392
	1/9	R7G-VRSFPB09D750	333	18.3	85	500	54.3	6.50×10^{-5}	1176	588
	1/15	R7G-VRSFPB15D750	200	30.5	85	300	90.5	7.09×10^{-5}	1372	686
	1/25	R7G-VRSFPB25E750	120	50.8	85	180	151	7.05×10^{-5}	2058	1029

原正科技有限公司
購買、維修、點手冊零組件
電話：037-466333
Email: service@repairtw.com
Line id: @fzzz
www.repairtw.com

Note 1. The reduction gear inertia indicates the Servomotor shaft conversion value.

Note 2. The enclosure rating for Servomotors with reduction gears is IP44.

Note 3. The allowable radial torque is the value for the center of the shaft.

● Backlash = 45′ Max.

Model			Rated rotation speed	Rated torque	Ratio	Maximum momentary rotation speed	Maximum momentary torque	Reduction gear inertia	Allow-able radial torque	Allow-able thrust torque
			r/min	N·m	%	r/min	N·m	kg·m^2	N	N
50 W	1/5	R7G-RGSF05B50	600	0.517	65	900	1.56	4.13×10^{-6}	392	196
	1/9	R7G-RGSF09B50	333	0.93	65	500	2.81	3.53×10^{-6}	441	220
	1/15	R7G-RGSF15B50	200	1.67	70	300	5.04	3.67×10^{-6}	588	294
	1/25	R7G-RGSF25B50	120	2.78	70	180	8.40	3.59×10^{-6}	686	343
100 W	1/5	R7G-RGSF05B100	600	1.19	75	900	3.60	4.08×10^{-6}	392	196
	1/9	R7G-RGSF09B100	333	2.29	80	500	6.91	3.43×10^{-6}	441	220
	1/15	R7G-RGSF15B100	200	3.82	80	300	11.5	3.62×10^{-6}	588	294
	1/25	R7G-RGSF25B100	120	4.02 (See note 4.)	50	180	12.0 (See note 4.)	3.54×10^{-6}	686	343
200 W	1/5	R7G-RGSF05B200	600	2.71	85	900	8.10	1.53×10^{-5}	392	196
	1/9	R7G-RGSF09C400	333	3.78	66	500	11.3	2.68×10^{-5}	931	465
	1/15	R7G-RGSF15C400	200	6.31	66	300	18.9	2.71×10^{-5}	1176	588
	1/25	R7G-RGSF25C400	120	11.1	70	180	33.4	2.67×10^{-5}	1323	661
400 W	1/5	R7G-RGSF05C400	600	5.40	85	900	16.2	3.22×10^{-5}	784	392
	1/9	R7G-RGSF09C400	333	9.49	83	500	28.5	2.68×10^{-5}	931	465
	1/15	R7G-RGSF15C400	200	15.8	83	300	47.6	2.71×10^{-5}	1176	588
	1/25	R7G-RGSF25C400	120	21.7 (See note 4.)	68	180	65.1 (See note 4.)	2.67×10^{-5}	1323	661
750 W	1/5	R7G-RGSF05C750	600	10.8	90	900	32.0	7.17×10^{-5}	784	392
	1/9	R7G-RGSF09C750	333	9.7 (See note 4.)	45	500	29.1 (See note 4.)	6.46×10^{-5}	931	465
	1/15	R7G-RGSF15C750	200	16.2 (See note 4.)	45	300	48.6 (See note 4.)	7.53×10^{-5}	1176	588
	1/25	R7G-RGSF25C750	120	21.7 (See note 4.)	36	180	65.1 (See note 4.)	7.22×10^{-5}	1323	661

正正科技有限公司
購買、維修 此手冊零組件
電話： 037-466333
Email: service@repairtw.com
Line ID: @zzz
www.repairtw.com

Note 1. The reduction gear inertia indicates the Servomotor shaft conversion value.

Note 2. The enclosure rating for Servomotors with reduction gears is IP44.

Note 3. The allowable radial torque is the value for the center of the shaft.

Note 4. These are the allowable torque values for the reduction gears. Do not exceed these values.

■ Reduction Gears for Flat-style Servomotors

● Backlash = 3′ Max.

Model			Rated rotation speed	Rated torque	Ratio	Maximum momentary rotation speed	Maximum momentary torque	Reduction gear inertia	Allowable radial torque	Allowable thrust torque
			r/min	N·m	%	r/min	N·m	kg·m²	N	N
100 W	1/5	R7G-VRSFPB05B100P	600	1.19	75	900	3.60	1.60×10^{-5}	392	196
	1/9	R7G-VRSFPB09B100P	333	2.29	80	500	6.91	1.37×10^{-5}	441	220
	1/15	R7G-VRSFPB15B100P	200	3.82	80	300	11.5	3.38×10^{-6}	588	294
	1/25	R7G-VRSFPB25C100P	120	6.36	80	180	19.2	3.68×10^{-6}	1323	661
200 W	1/5	R7G-VRSFPB05B200P	600	2.71	85	900	8.12	1.53×10^{-5}	392	196
	1/9	R7G-VRSFPB09C400P	333	3.78	66	500	11.3	2.56×10^{-5}	931	465
	1/15	R7G-VRSFPB15C400P	200	6.31	66	300	18.9	2.71×10^{-5}	1176	588
	1/25	R7G-VRSFPB25C200P	120	11.1	70	180	33.4	2.67×10^{-5}	1323	661
400 W	1/5	R7G-VRSFPB05C400P	600	5.40	85	900	16.2	3.23×10^{-5}	784	392
	1/9	R7G-VRSFPB09C400P	333	9.49	83	500	28.5	2.56×10^{-5}	931	465
	1/15	R7G-VRSFPB15C400P	200	15.8	83	300	47.6	2.71×10^{-5}	1176	588
	1/25	R7G-VRSFPB25D400P	120	26.4	83	180	79.3	2.79×10^{-5}	1617	808
750 W	1/5	R7G-VRSFPB05C750P	600	10.8	90	900	32.0	7.17×10^{-5}	784	392
	1/9	R7G-VRSFPB09D750P	333	18.3	85	500	54.3	6.50×10^{-5}	1176	588
	1/15	R7G-VRSFPB15D750P	200	30.5	85	300	90.5	6.86×10^{-5}	1372	686
	1/25	R7G-VRSFPB25E750P	120	50.8	85	180	151	7.05×10^{-5}	2058	1029

Note 1. The reduction gear inertia indicates the Servomotor shaft conversion value.

Note 2. The enclosure rating for Servomotors with reduction gears is IP44.

Note 3. The allowable radial torque is the value for the center of the shaft.

正研科技有限公司
購買、維修、此手冊零組件
電話： 037-466333
Email: service@repairtw.com
Line Id: @zzzz
www.repairtw.com

● Backlash = 45′ Max.

Model			Rated rotation speed	Rated torque	Ratio	Maximum momentary rotation speed	Maximum momentary torque	Reduction gear inertia	Allow-able radial torque	Allow-able thrust torque
			r/min	N·m	%	r/min	N·m	kg·m²	N	N
100 W	1/5	R7G-RGSF05B100P	600	1.19	75	900	3.60	1.60×10^{-5}	392	196
	1/9	R7G-RGSF09B100P	333	2.29	80	500	6.91	1.37×10^{-5}	441	220
	1/15	R7G-RGSF15B100P	200	3.82	80	300	11.5	3.38×10^{-6}	588	294
	1/25	R7G-RGSF25B100P	120	4.02 (See note 4.)	50	180	12.0 (See note 4.)	3.78×10^{-6}	686	343
200 W	1/5	R7G-RGSF05B200P	600	2.71	85	900	8.10	1.53×10^{-5}	392	196
	1/9	R7G-RGSF09C400P	333	3.78	66	500	11.3	2.56×10^{-5}	931	465
	1/15	R7G-RGSF15C400P	200	6.31	66	300	18.9	2.71×10^{-5}	1176	588
	1/25	R7G-RGSF25C400P	120	11.1	70	180	33.4	2.67×10^{-5}	1323	661
400 W	1/5	R7G-RGSF05C400P	600	5.40	85	900	16.2	3.23×10^{-5}	784	392
	1/9	R7G-RGSF09C400P	333	9.49	83	500	28.5	2.56×10^{-5}	931	465
	1/15	R7G-RGSF15C400P	200	15.8	83	300	47.6	2.71×10^{-5}	1176	588
	1/25	R7G-RGSF25C400P	120	21.7 (See note 4.)	68	180	65.1 (See note 4.)	2.67×10^{-5}	1323	661
750 W	1/5	R7G-RGSF05C750P	600	10.8	90	900	32.0	7.17×10^{-5}	784	392
	1/9	R7G-RGSF09C750P	333	9.7 (See note 4.)	45	500	29.1 (See note 4.)	6.00×10^{-5}	931	465
	1/15	R7G-RGSF15C750P	200	16.2 (See note 4.)	45	300	48.6 (See note 4.)	7.65×10^{-5}	1176	588
	1/25	R7G-RGSF25C750P	120	21.7 (See note 4.)	36	180	65.1 (See note 4.)	7.22×10^{-5}	1323	661

上正科技有限公司
購買、維修 此手冊零組件
電話： 037-100333
Email: service@repairtw.com
Line id: @zzzz
www.repairtw.com

Note 1. The reduction gear inertia indicates the Servomotor shaft conversion value.

Note 2. The enclosure rating for Servomotors with reduction gears is IP44.

Note 3. The allowable radial torque is the value for the center of the shaft.

Note 4. These are the allowable torque values for the reduction gears. Do not exceed these values.

2-6 Cable and Connector Specifications

2-6-1 Control Cables

■ General Control Cables (R88A-CPU□□□S)

A General Control Cable is connected to the Servo Driver's Control I/O Connector (CN1). There is no connector on the Controller end. When connecting it to a Position Control Unit with no special cable provided, or to a controller manufactured by another company, wire a connector to match the controller.

Note There is one method for connecting to a Controller with no special cable provided, and another method for using connector Terminal Block cable and a connector Terminal Block.

● Cable Models

Model	Length (L)	Outer diameter of sheath	Weight
R88A-CPU001S	1 m	9.9 dia.	Approx. 0.3 kg
R88A-CPU002S	2 m		Approx. 0.6 kg

上正科技有限公司
購買、維修 此手冊零組件
電話： 037-466333
Email: service@repairtw.com
Line id: @zzz
www.repairtw.com

● Connection Configuration and External Dimensions

● Wiring

No.	Wire/Mark color	Symbol
1	Orange/Black (–)	+CW
2	Orange/Red (–)	–CW
3	Gray/Black (–)	+CCW
4	Gray/Red (–)	–CCW
5	White/Black (–)	+ECRST
6	White/Red (–)	–ECRST
7	Yellow/Black (–)	BKIR
8	Yellow/Red (–)	INP
9	Pink/Black (–)	
10	Pink/Red (–)	OGND
11	Gray/Black (—)	
12	Gray/Red (—)	
13	Orange/Black (—)	+24VIN
	Orange/Red (—)	+24VIN
14	White/Black (—)	RUN
15	White/Red (—)	
16	Yellow/Black (—)	
17	Yellow/Red (—)	
18	Pink/Black (—)	RESET

No.	Wire/Mark color	Symbol
19	Pink/Red (—)	GND
20	Orange/Black (——)	RXD+
21	Orange/Red (——)	RXD–
22	Gray/Black (——)	TXD+
23	Gray/Red (——)	TXD–
24	White/Black (——)	RT
25	White/Red (——)	
26	Yellow/Black (——)	
27	Yellow/Red (——)	
28	Pink/Black (——)	
29	Pink/Red (——)	
30	Orange/Black (———)	
31	Orange/Red (———)	
32	Gray/Black (———)	Z
33	Gray/Red (———)	ZCOM
34	White/Black (———)	$\overline{\text{ALM}}$
35	White/Red (———)	ALMCOM
36		
Shell	Shield	FG

Connector Pin Arrangement

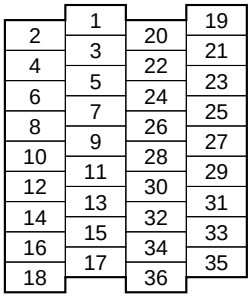

上正科技有限公司
維修 檢測 此手冊零組件
電話： 037-466333
Email: service@repairtw.com
Line Id: @2222
www.repairtw.com

Connector plug: 10136-3000VE (Sumitomo 3M)
Connector case: 10336-52A0-008 (Sumitomo 3M)
Cable: AWG24 × 18P UL20276

Note Wires with the same wire color and the same number of marks form twisted pairs. For example, the orange wire with one red mark (–) is twisted together with the orange wire with one black mark (–).

■ Connector Terminal Block Cables (R88A-CTU□□□N)

● Cable Models

Model	Length (L)	Outer diameter of sheath	Weight
R88A-CTU001N	1 m	9.9 dia.	Approx. 0.3 kg
R88A-CTU002N	2 m		Approx. 0.6 kg

● Connection Configuration and External Dimensions

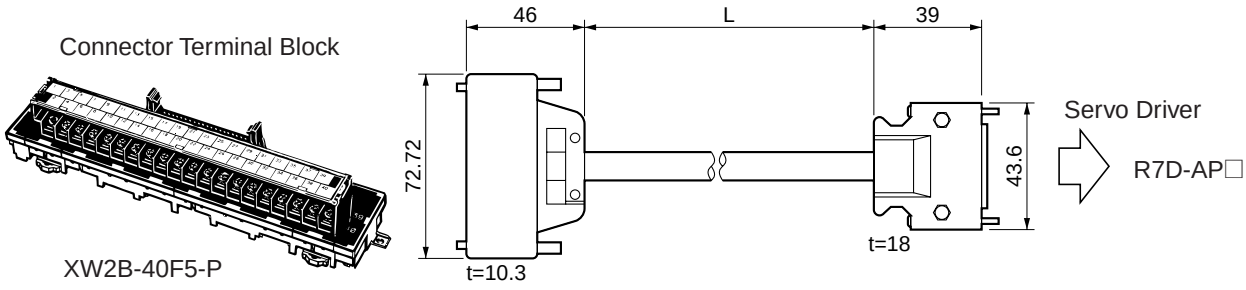

● Wiring

Terminal Block No.	Connector No.		Servo Driver No.	Servo Driver Symbol
1	A	1	1	+CW
2	B	1	2	–CW
3	A	2	3	–CCW
4	B	2	4	–CCW
5	A	3	5	+ECRST
6	B	3	6	–ECRST
7	A	4	7	BKIR
8	B	4	8	INP
9	A	5	9	
10	B	5	10	OGND
11	A	6	11	
12	B	6	12	
13	A	7	13	+24VIN
14	B	7	14	RUN
15	A	8	15	
16	B	8	16	
17	A	9	17	
18	B	9	18	RESET
19	A	10	19	GND
20	B	10	20	RXD+
21	A	11	21	RXD–
22	B	11	22	TXD+
23	A	12	23	TXD–
24	B	12	24	RT
25	A	13	25	
26	B	13	26	
27	A	14	27	
28	B	14	28	
29	A	15	29	
30	B	15	30	
31	A	16	31	
32	B	16	32	Z
33	A	17	33	ZCOM
34	B	17	34	$\overline{\text{ALM}}$
35	A	18	35	ALMCOM
36	B	18	Shell	FG
37	A	19		
38	B	19		
39	A	20		
40	B	20		

Servo Driver connector:
Connector plug:
10136-3000VE (Sumitomo 3M)
Connector case:
10336-52A0-008 (Sumitomo 3M)
Terminal block connector
Connector plug:
FCN-361J040-AU (Fujitsu)
Connector case:
FCN-360C040-B (Fujitsu)
Cable: AWG24 × 18P UL20276

上正科技有限公司
購買、維修 此手冊零組件
電話： 037-466383
Email: service@urpanel.com
Line id: @zzzz
www.repairtw.com

2-6-2 Servomotor Cables

A Servomotor Cable connects a Servomotor to the Servo Driver and is available in either of two types: Separate Cables and Integrated Cables. The Integrated Cables include the encoder cable and power cable. Select a Cable to match the Servomotor being used. The maximum distance between the Servomotor and the Servo Driver is 20 meters.

Note: Use a robot cable if cable flexibility is required.

	Integrated cables
	Model
For Servomotors without brakes	R7A-CEA□□□S
For Servomotors with brakes	R7A-CEA□□□B

	Separate cables	
	Standard cable models	Robot cable models
Power cable	R88A-CAWA□□□S	R88A-CAWA□□□SR
Encoder cable	R7A-CRA□□□C	R7A-CRA□□□CR
Power cable	R88A-CAWA□□□B	R88A-CAWA□□□BR
Encoder cable	R7A-CRA□□□C	R7A-CRA□□□CR

● Robot Cable Bending Durability

A Robot Cable uses materials that enable a service life of 20 million bendings minimum under the following conditions for the minimum bending radius (R) or larger.

上正科技有限公司
購買 維修 此手冊零組件
請洽： 037-461333
Email: service@repairtw.com
Line id: @rrz
www.repairtw.com

Note 1. The service life data on bending durability consists of test values. Use this data only as reference values, and allow margin in actual application.

Note 2. The bending durability is the number of times that the Cable can be bent without breaking or other damage occurring that affects the sheath functionality when the conductors inside the cable are conducting electricity. The bending durability does not apply to the shield breaking.

Note 3. Mechanical failure, ground faults, or other problems may occur due to damaged insulation if the Cable is used with a radius smaller than the minimum bending radius. Contact your OMRON representative if the Cable will be used with a radius smaller than the minimum bending radius.

● Power Cables

	Model	Minimum bending radius (R)
For Servomotors without brakes	R88A-CAWA□□□SR	55 mm
For Servomotors with brakes	R88A-CAWA□□□BR	55 mm

□: 003 to 020

● Encoder Cables

Model	Minimum bending radius (R)
R7A-CRA□□□CR	46 mm

□: 003 to 020

● **Bending Test**

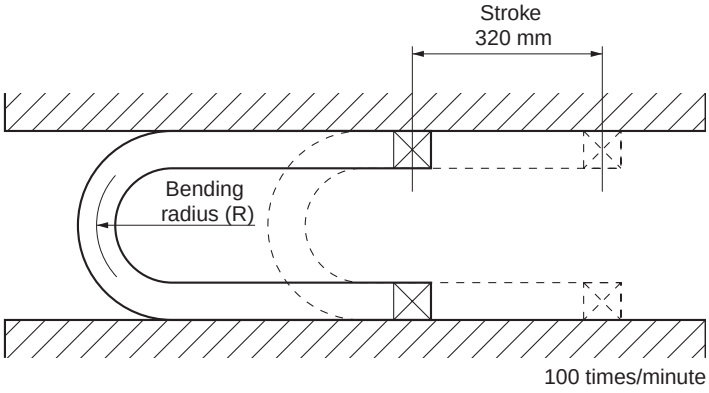

2-6-3 Specifications of Integrated Cables

■ Integrated Cables for Servomotors without Brakes (R7A-CEA□□□S)

上正科技有限公司
購買、維修、此手冊零組件
電話： 02-2446333
Email: service@repairtw.com
Line id: @zzzz
www.repairtw.com

● **Cable Models**

Model	Length (L)	Outer diameter of sheath	Weight
R7A-CEA003S	3 m	12.4 dia.	Approx. 0.8 kg
R7A-CEA005S	5 m		Approx. 1.2 kg
R7A-CEA010S	10 m		Approx. 2.1 kg
R7A-CEA015S	15 m		Approx. 3.1 kg
R7A-CEA020S	20 m		Approx. 4.0 kg

● **Connection Configuration and External Dimensions**

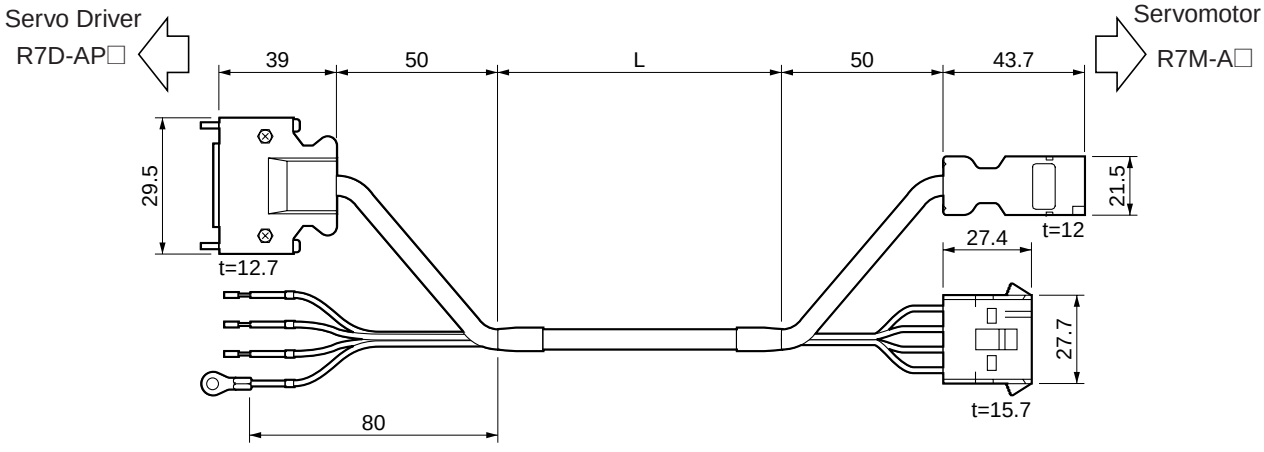

● Wiring

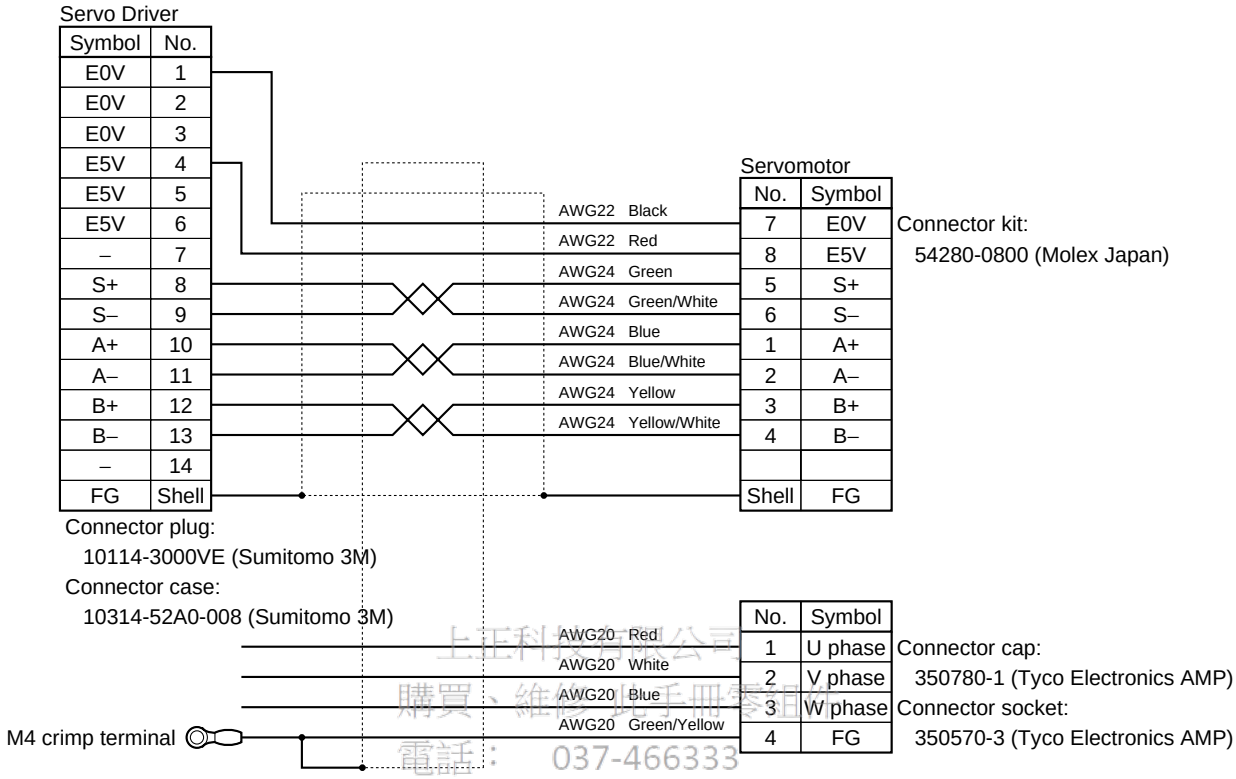

上正科技有限公司
購買、維修、更換手冊零組件
電話： 037-466333
Email: service@repairtw.com
Line id: @zzzz
www.repairtw.com

■ Integrated Cables for Servomotors with Brakes (R7A-CEA□□□B)

● Cable Models

Model	Length (L)	Outer diameter of sheath	Weight
R7A-CEA003B	3 m	12.4 dia.	Approx. 0.8 kg
R7A-CEA005B	5 m		Approx. 1.2 kg
R7A-CEA010B	10 m		Approx. 2.1 kg
R7A-CEA015B	15 m		Approx. 3.1 kg
R7A-CEA020B	20 m		Approx. 4.0 kg

● Connection Configuration and External Dimensions

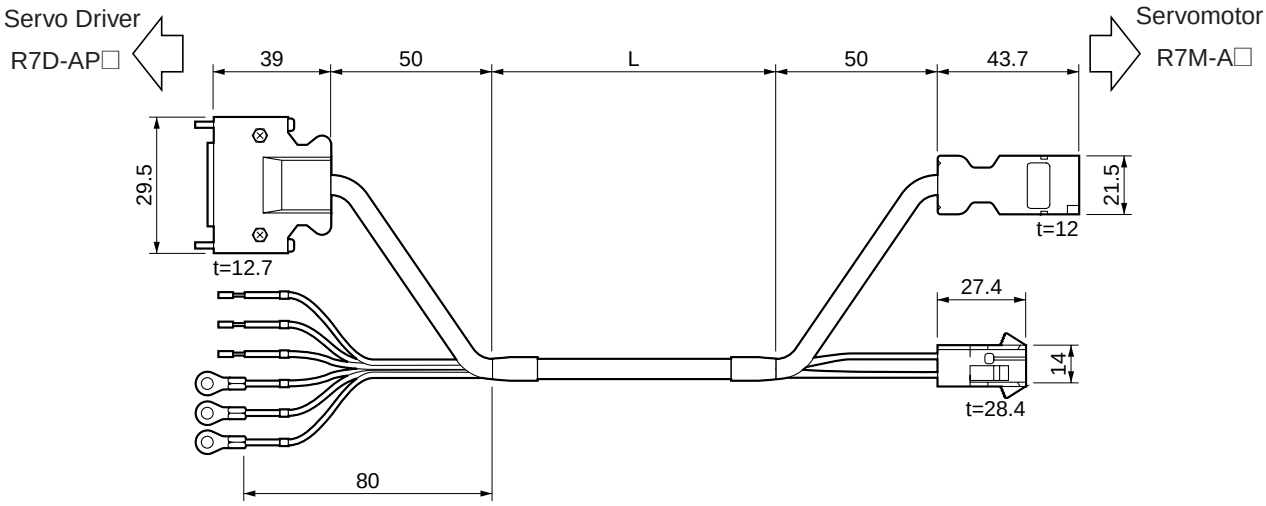

● Wiring

上正科技有限公司
購買、維修 此手冊零組件
電話： 037-466333
Email: service@repairtw.com
Line id: @mzz
www.repairtw.com

Servo Driver

Symbol	No.
E0V	1
E0V	2
E0V	3
E5V	4
E5V	5
E5V	6
–	7
S+	8
S–	9
A+	10
A–	11
B+	12
B–	13
–	14
FG	Shell

Connector plug:
10114-3000VE (Sumitomo 3M)
Connector case:
10314-52A0-008 (Sumitomo 3M)

Servomotor

		No.	Symbol
AWG22	Black	7	E0V
AWG22	Red	8	E5V
AWG24	Green	5	S+
AWG24	Green/White	6	S–
AWG24	Blue	1	A+
AWG24	Blue/White	2	A–
AWG24	Yellow	3	B+
AWG24	Yellow/White	4	B–
		Shell	FG

Connector kit:
54280-0800 (Molex Japan)

		No.	Symbol
AWG20	Red	1	U phase
AWG20	White	2	V phase
AWG20	Blue	3	W phase
AWG20	Green/Yellow	4	FG
AWG20	Black	5	Brake
AWG20	Brown	6	Brake

Connector cap:
350781-1 (Tyco Electronics AMP)
Connector socket
350570-3 (Tyco Electronics AMP)

M4 crimp terminal
M4 crimp terminal
M4 crimp terminal

2-6-4 Specifications of Separate Cables

■ Specifications of Standard Power Cables (R88A-CAWA□□□□)

Select a Power Cable to match the Servomotor being used. The cable length is 3 to 20 m.
(The maximum distance between the Servomotor and the Servo Driver is 20 m.)

Power Cables for Servomotors without Brakes			
Model	**Length (L)**	**Outer diameter of sheath**	**Weight**
R88A-CAWA003S	3 m	6.2 dia.	Approx. 0.2 kg
R88A-CAWA005S	5 m		Approx. 0.3 kg
R88A-CAWA010S	10 m		Approx. 0.6 kg
R88A-CAWA015S	15 m		Approx. 0.9 kg
R88A-CAWA020S	20 m		Approx. 1.2 kg

Power Cables for Servomotors with Brakes			
Model	**Length (L)**	**Outer diameter of sheath**	**Weight**
R88A-CAWA003B	3 m	7.4 dia.	Approx. 0.3 kg
R88A-CAWA005B	5 m		Approx. 0.5 kg
R88A-CAWA010B	10 m		Approx. 0.9 kg
R88A-CAWA015B	15 m		Approx. 1.3 kg
R88A-CAWA020B	20 m		Approx. 1.7 kg

上正科技有限公司
購買、維修 此手冊零組件
電話： 037-466333
Email: service@repairtw.com
Line Id: @zzzz
www.repairtw.com

● Connection Configuration and External Dimensions

Power Cables for Servomotors without Brakes

Power Cables for Servomotors with Brakes

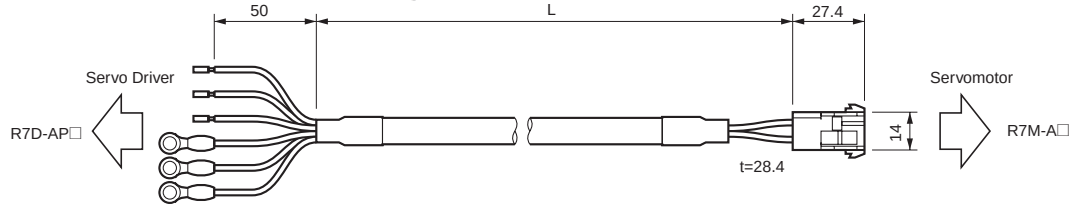

● Wiring

Power Cables for Servomotors without Brakes

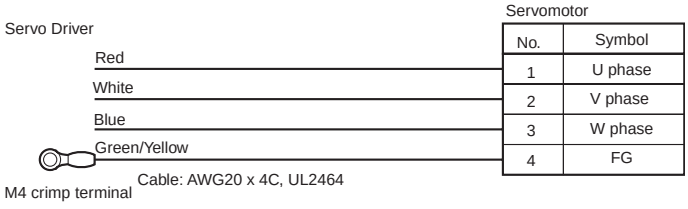

Cable side:

Connector cap: 350780-1 (Tyco Electronics AMP)

Connector socket: 350689-3 (Tyco Electronics AMP)

Servomotor side:

Connector plug: 350779-1 (Tyco Electronics AMP)

Contact pin:

350690-3: Pin No. 1 to 3 (Tyco Electronics AMP)

770210-1: Pin No. 4 (Tyco Electronics AMP)

Power Cables for Servomotors with Brakes

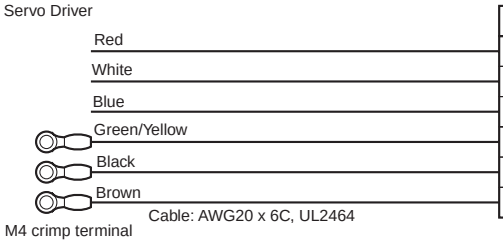

Servomotor

No.	Symbol
1	U phase
2	V phase
3	W phase
4	FG
5	Brake
6	Brake

Cable side:

Connector cap: 350781-1 (Tyco Electronics AMP)

Connector socket: 350689-3 (Tyco Electronics AMP)

Servomotor side:

Connector plug: 350715-1 (Tyco Electronics AMP)

Contact pin:

350690-3: Pin No. 1 to 3, 5, and 6 (Tyco Electronics AMP)

770210-1: Pin No. 4 (Tyco Electronics AMP)

■ Specifications of Robot Power Cables (R88A-CAWA□□□R)

Use one of the following Robot Power Cables if the cable will be used in an environment that requires cable flexibility or if it will be used with moving parts.

Power Cables for Servomotors without Brakes				Power Cables for Servomotors with Brakes			
Model	**Length (L)**	**Outer diameter of sheath**	**Weight**	**Model**	**Length (L)**	**Outer diameter of sheath**	**Weight**
R88A-CAWA003SR	3 m	7.4 dia.	Approx. 0.2 kg	R88A-CAWA003BR	3 m	7.0 dia.	Approx. 0.3 kg
R88A-CAWA005SR	5 m		Approx. 0.3 kg	R88A-CAWA005BR	5 m		Approx. 0.4 kg
R88A-CAWA010SR	10 m		Approx. 0.7 kg	R88A-CAWA010BR	10 m		Approx. 0.9 kg
R88A-CAWA015SR	15 m		Approx. 1.0 kg	R88A-CAWA015BR	15 m		Approx. 1.3 kg
R88A-CAWA020SR	20 m		Approx. 1.3 kg	R88A-CAWA020BR	20 m		Approx. 1.7 kg

上揚科技有限公司
購買 維修 此款伺服零組件
電話：037-46333
Email: service@repairtw.com
Line id: @zzzzz
www.repairtw.com

● Connection Configuration and External Dimensions

Power Cables for Servomotors without Brakes

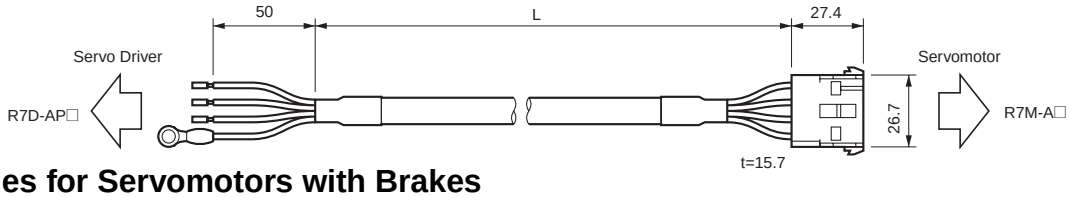

Power Cables for Servomotors with Brakes

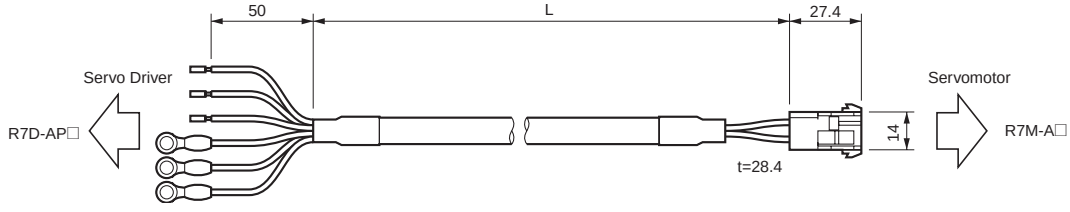

● Wiring

Power Cables for Servomotors without Brakes

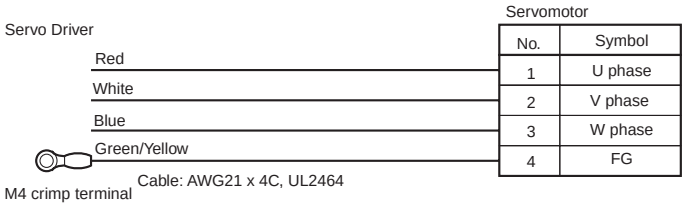

No.	Symbol
1	U phase
2	V phase
3	W phase
4	FG

Cable side:
Connector cap: 350780-1 (Tyco Electronics AMP)
Connector socket: 350689-3 (Tyco Electronics AMP)
Servomotor side:
Connector plug: 350779-1 (Tyco Electronics AMP)
Contact pin:
350690-3: Pin No. 1 to 3 (Tyco Electronics AMP)
770210-1: Pin No. 4 (Tyco Electronics AMP)

Power Cables for Servomotors with Brakes

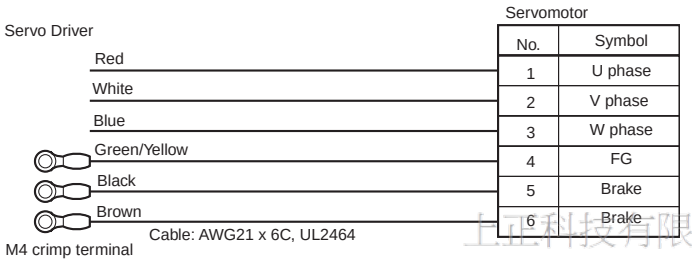

No.	Symbol
1	U phase
2	V phase
3	W phase
4	FG
5	Brake
6	Brake

Cable side:
Connector cap: 350781-1 (Tyco Electronics AMP)
Connector socket: 350689-3 (Tyco Electronics AMP)
Servomotor side:
Connector plug: 350715-1 (Tyco Electronics AMP)
Contact pin:
350690-3: Pin No. 1 to 3, 5, and 6 (Tyco Electronics AMP)
770210-1: Pin No. 4 (Tyco Electronics AMP)

上正科技有限公司
購買、維修 此手冊零組件
電話： 037-466333
Email: service@repairtw.com
Line Id: @zzzz
www.repairtw.com

■ Specifications of Standard Encoder Cables (R7A-CRA□□□C)

Model	Length (L)	Outer diameter of sheath	Weight
R7A-CRA003C	3 m	7.4 dia.	Approx. 0.2 kg
R7A-CRA005C	5 m		Approx. 0.3 kg
R7A-CRA010C	10 m		Approx. 0.7 kg
R7A-CRA015C	15 m		Approx. 1.0 kg
R7A-CRA020C	20 m		Approx. 1.3 kg

■ Specifications of Robot Encoder Cables (R7A-CRA□□□CR)

Model	Length (L)	Outer diameter of sheath	Weight
R7A-CRA003CR	3 m	7.0 dia.	Approx. 0.3 kg
R7A-CRA005CR	5 m		Approx. 0.4 kg
R7A-CRA010CR	10 m		Approx. 0.9 kg
R7A-CRA015CR	15 m		Approx. 1.3 kg
R7A-CRA020CR	20 m		Approx. 1.7 kg

Note The connection configuration, external dimensions, and wiring are the same for both Standard Cables and Robot Cables.

● Connection Configuration and External Dimensions

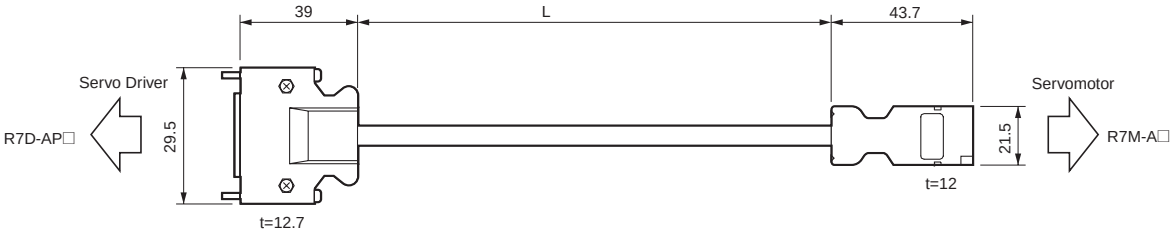

● Wiring

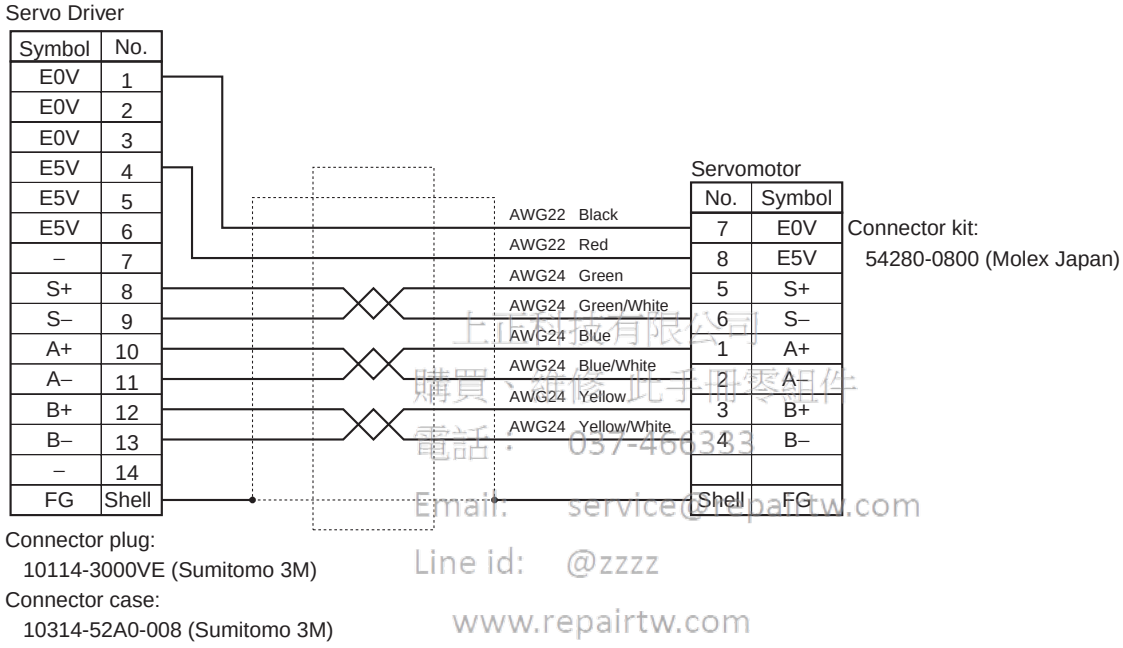

Connector plug:
10114-3000VE (Sumitomo 3M)
Connector case:
10314-52A0-008 (Sumitomo 3M)

上正科技有限公司
購買、維修此手冊零組件
電話： 037-466333
Email: service@repairtw.com
Line id: @zzzz
www.repairtw.com

2-6-5 Peripheral Cables and Connector Specifications

■ Analog Monitor Cable (R88A-CMW001S)

This is cable for connecting to the Servo Driver's Monitor Output Connector (CN4). It is required for connecting monitor outputs to external devices such as measuring instruments.

● Cable Model

Model	Length (L)	Weight
R88A-CMW001S	1 m	Approx. 0.1 kg

● Connection Configuration and External Dimensions

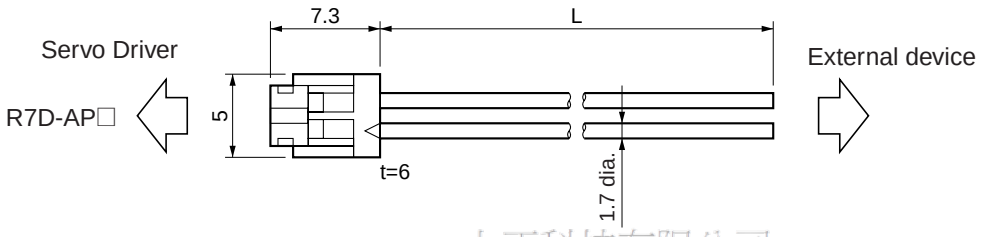

上正科技有限公司
購買、維修 此手冊零組件
電話： 037-466333
Email: service@repairtw.com
Line id: @zzzz
www.repairtw.com

● Wiring

Servo Driver

Symbol	No.	
NM	1	Red
AM	2	White
GND	3	Black
GND	4	Black

Cable: AW24 × 4C UL1007

Connector socket:
DF11-4DS-2C (Hirose Electric)
Connector contacts:
DF11-2428SCF (Hirose Electric)

■ Computer Monitor Cables (R7A-CCA002P□)

Computer Monitor Cable and Computer Monitoring Software (run on Windows, Cat. No. SBCE-011) for Servo Drivers are required to use a personal computer for monitoring and setting parameters for a Servo Driver. There are two kinds of cable, one for DOS personal computers, and the other for NEC PC98 notebook computers (but not for PC98 desktop computers).

● Cable Models

For DOS Computers

Model	Length (L)	Outer diameter of sheath	Weight
R7A-CCA002P2	2 m	4.2 dia.	Approx. 0.1 kg

For NEC PC98 Notebook Computers

Model	Length (L)	Outer diameter of sheath	Weight
R7A-CCA002P3	2 m	4.2 dia.	Approx. 0.1 kg

● Connection Configuration and External Dimensions

上正科技有限公司
購買、維修 此手冊零組件
電話 037-466333
Email service@repairtw.com
Line id. @zzzz
www.repairtw.com

For DOS Personal Computers:

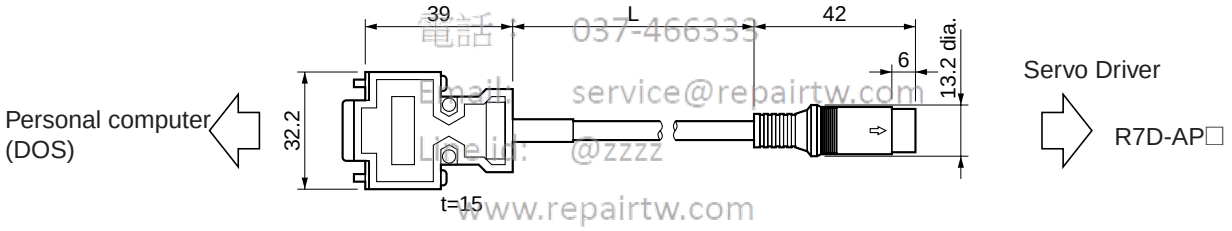

For NEC PC98 Notebook Computers

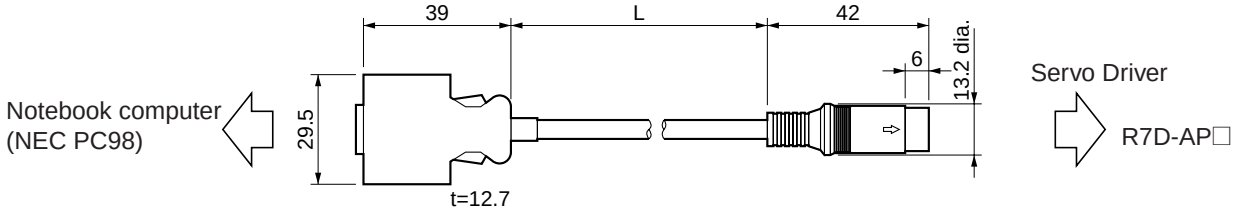

● Wiring

For DOS Personal Computers:

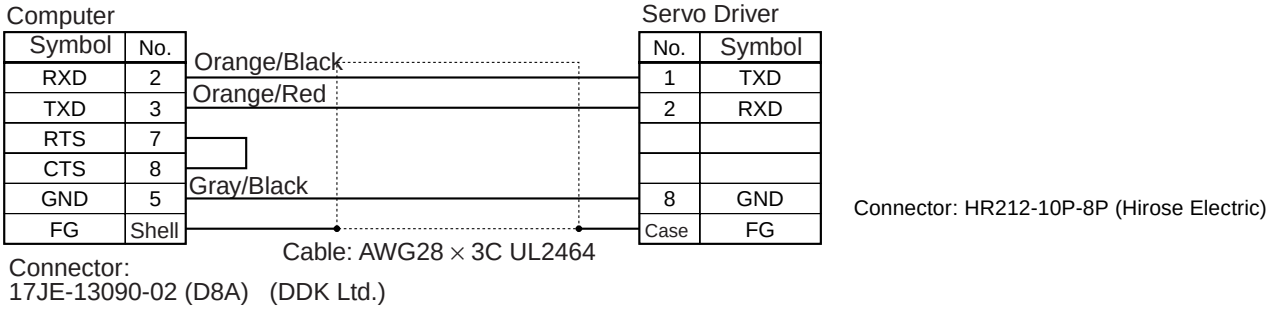

For NEC PC98 Notebook Computers

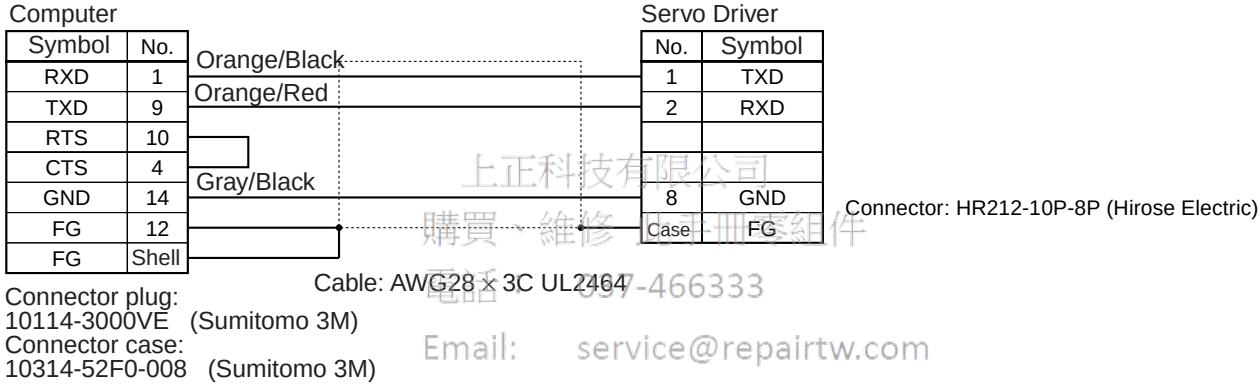

上正科技有限公司
購買、維修、出租、回收組件
電話 037-466333
Email: service@repairtw.com
Line id: @zzzz
www.repairtw.com

■ Control I/O Connector (R88A-CNU01C)

This is the connector for connecting to the Servo Driver's Control I/O Connector (CN1). This connector is used when the cable is prepared by the user.

● External Dimensions

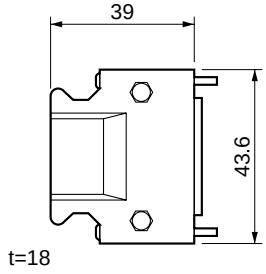

Connector plug:
10136-3000VE (Sumitomo 3M)
Connector case:
10336-52A0-008 (Sumitomo 3M)

■ Encoder Connector (R7A-CNA0□R)

This is the connector for the Encoder Cable. This connector is used when the cable is prepared by the user. It is a soldered-type connector, and the applicable cable is as follows.

- Applicable cable: AWG16 max.
- Outer diameter of coating: 2.1 mm dia. max.
- Outer diameter of sheath: 6.7 ± 0.5 mm dia.

● External Dimensions

R7A-CNA01R (Servo Driver CN2)

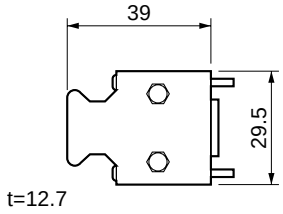

Connector plug:
10114-3000VE (Sumitomo 3M)
Connector case:
10314-52A0-008 (Sumitomo 3M)

上正科技有限公司
購買、維修 此手冊零組件
電話： 037-466333
Email: service@repairtw.com
Line id: @zzzz
www.repairtw.com

R7A-CNA02R (Servomotor)

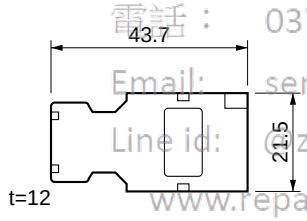

Connector kit:
54280-0800 (Molex Japan)

2-7 Servo Relay Units and Cable Specifications

This section provides the specifications for the Servo Relay Units and cables used for connecting to OMRON Position Control Units. Select the models that match the Position Control Unit being used. For details, refer to *3-2-1 Connecting Cable*.

All dimensions are in millimeters unless otherwise specified.

2-7-1 Servo Relay Units

■ XW2B-20J6-1B

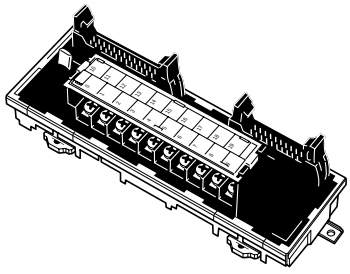

This Servo Relay Unit connects to the following OMRON Position Control Units. Communications are not supported.

- CS1W-NC113/-NC133
- CJ1W-NC113/-NC133
- C200HW-NC113
- C200H-NC112
- 3F88M-DRT141

上正科技有限公司
購買、維修 此手冊零組件
電話：
Email: service@repairtw.com
Line id: @zzzz
www.repairtw.com

● **External Dimensions**

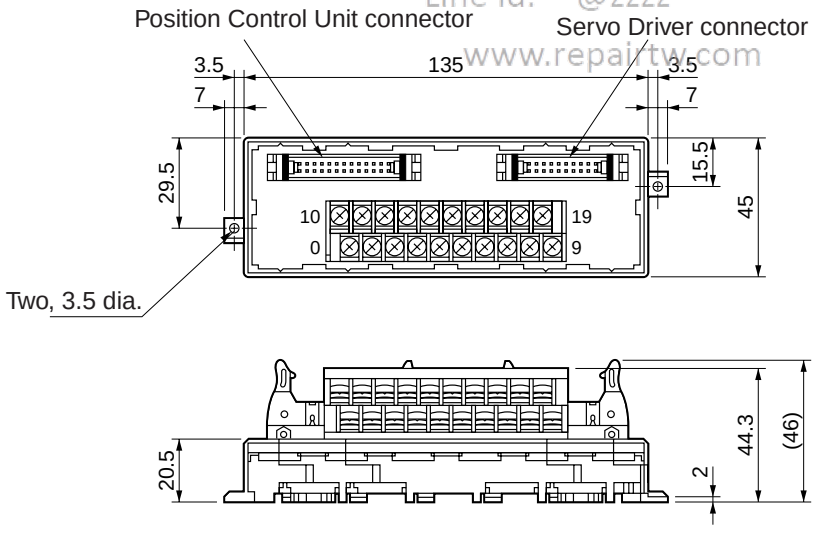

Note Terminal Block pitch: 7.62 mm

● Wiring

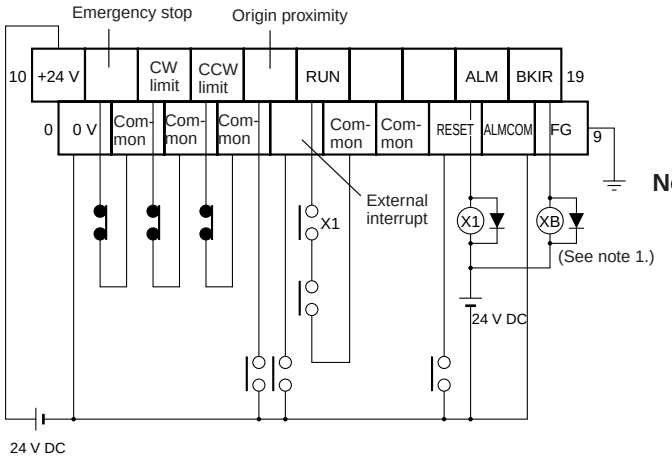

Note 1. The XB contact is used to turn ON/OFF the electromagnetic brake.
2. Do not connect unused terminals.
3. The 0 V terminal is internally connected to the common terminals.
4. The following crimp terminal is applicable: R1.25-3 (round with open end).

■ XW2B-40J6-2B

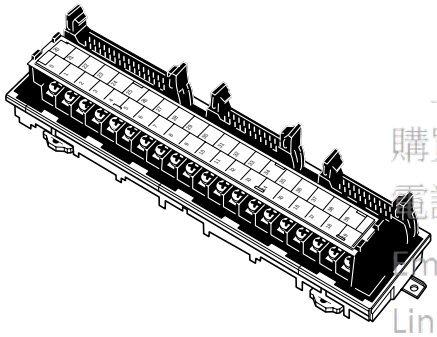

This Servo Relay Unit connects to the following OMRON Position Control Units. Communications are not supported.

- CS1W-NC213/-NC233/-NC413/-NC433
- CJ1W-NC213/-NC233/-NC413/-NC433
- C200HW-NC213/-NC413
- C500-NC113/-NC211
- C200H-NC211

上正科技有限公司
購買、維修 此手冊零組件
電話： 037-466333
Email: [illegible]@repairtw.com
Line id: @zzzz
www.repairtw.com

● External Dimensions

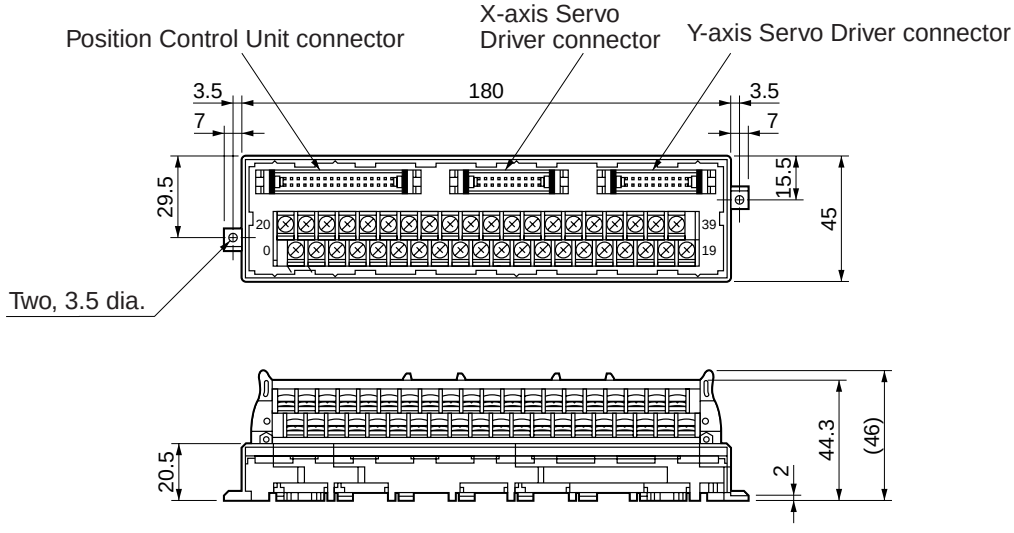

Note Terminal Block pitch: 7.62 mm

● Wiring

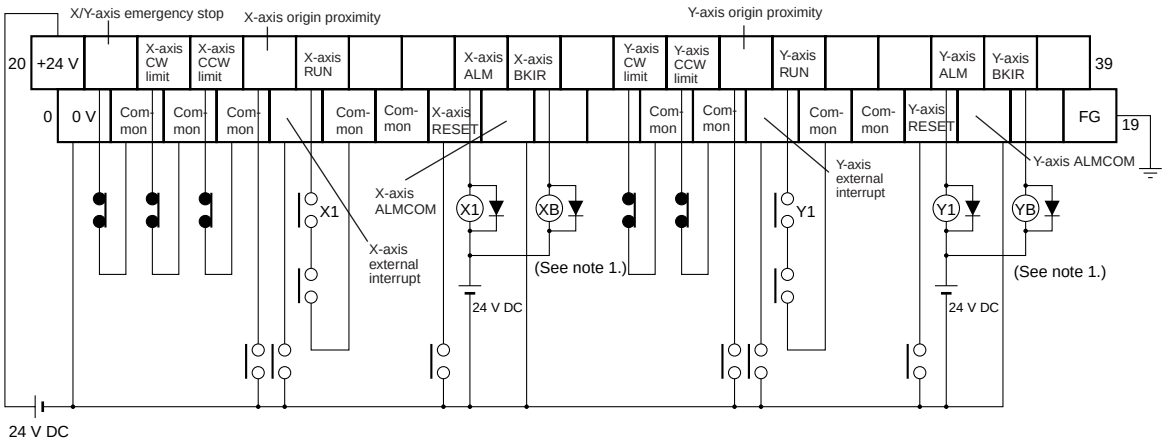

Note 1. The XB contact is used to turn ON/OFF the electromagnetic brake.
2. Do not connect unused terminals.
3. The 0 V terminal is internally connected to the common terminals.
4. The following crimp terminal is applicable: R1.25-3 (round with open end).

■ XW2B-20J6-3B

上正科技有限公司
購買 維修 技術諮詢 零組件
電話： 037-466333
Email: sales@repairtw.com
Line id: @zzzz
www.repairtw.com

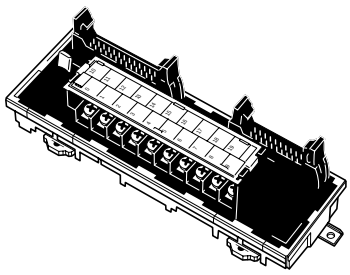

This Servo Relay Unit connects to the following OMRON Programmable Controllers. Communications are not supported.

- CQM1-CPU43-V1
- CQM1H-PLB21
  (Pulse I/O Board for CQM1H-CPU51/-CPU61)
- CS1W-HCP22

● External Dimensions

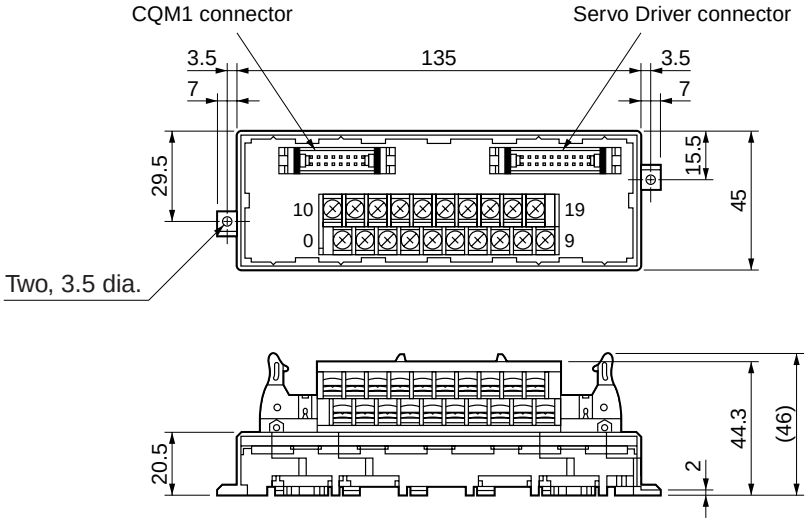

Note Terminal Block pitch: 7.62 mm

● Wiring

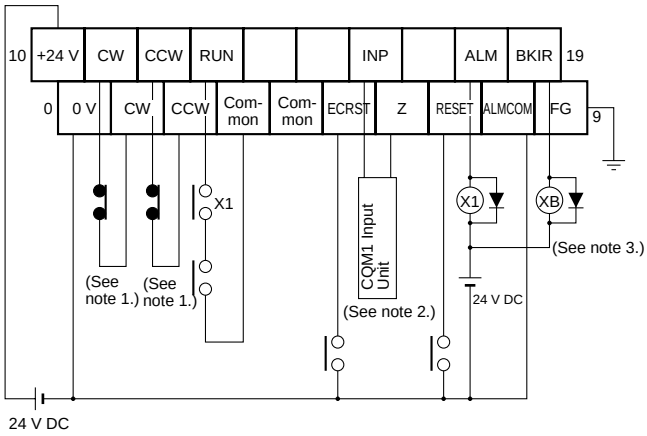

Note 1. If these signals are input, the CQM1 output pulse can be input into the High-speed Counter.

Note 2. Input this output signal to the CQM1 Input Unit.

Note 3. The XB contact is used to turn ON/OFF the electromagnetic brake.

Note 4. Phase Z is an open-collector output.

Note 5. Do not connect unused terminals.

Note 6. The 0-V terminal is internally connected to the common terminals.

Note 7. The following crimp terminal is applicable: R1.25-3 (round with open end).

上正科技有限公司
購買、維修此手冊產品
電話： 037-466333
Email: service@repairtw.com
Line id: @zzzz
www.repairtw.com

■ XW2B-40J6-4A

This Servo Relay Unit connects to the following OMRON Position Control Units. Communications are supported.

- CS1W-NC213/-NC233/-NC413/-NC433
- CJ1W-NC213/-NC233/-NC413/-NC433

● External Dimensions

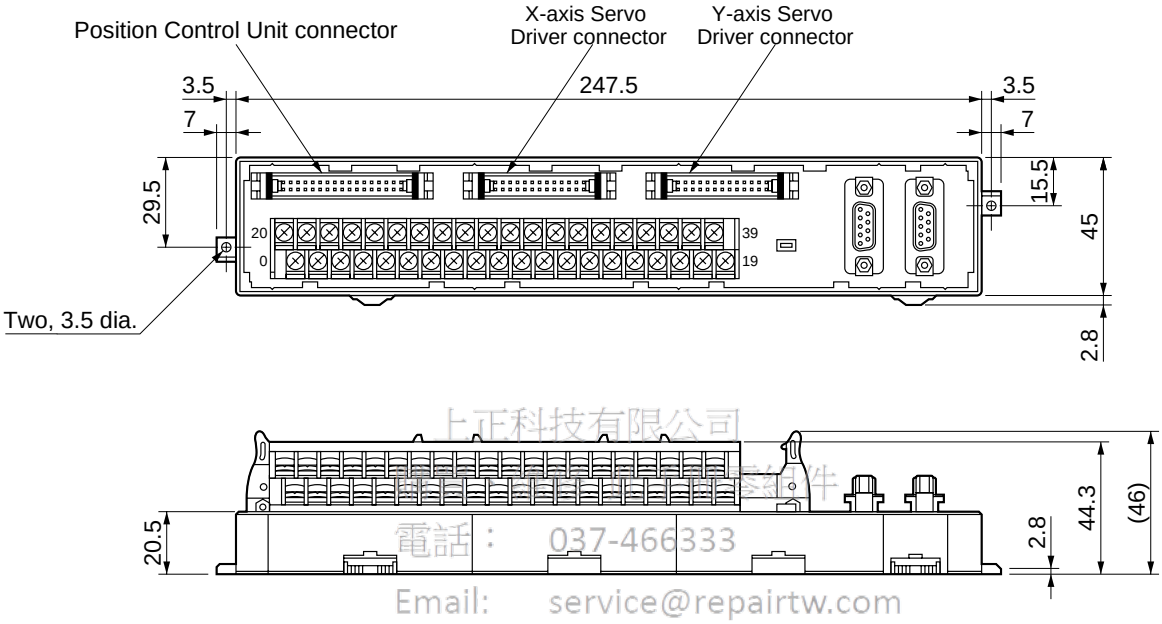

上正科技有限公司
專業工業自動化產品銷售與維修
電話： 037-466333
Email: service@repairtw.com
Line id: @zzzz
www.repairtw.com

Note Terminal Block pitch: 7.62 mm.

● Wiring

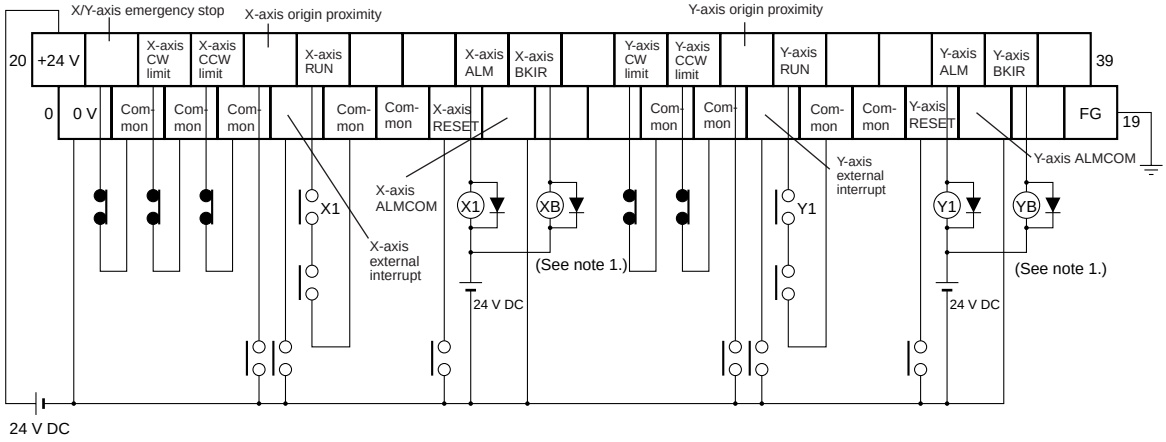

Note 1. The XB contact is used to turn ON/OFF the electromagnetic brake.
2. Do not connect unused terminals.
3. The 0 V terminal is internally connected to the common terminals.
4. The following crimp terminal is applicable: R1.25-3 (round with open end).

■ XW2B-20J6-8A

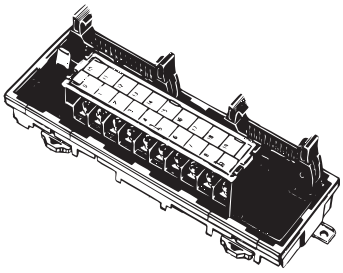

This Servo Relay Unit connects to the following OMRON Programmable Controllers. Communications are not supported.

- CJ1M-CPU21/-CPU22/-CPU23

● External Dimensions

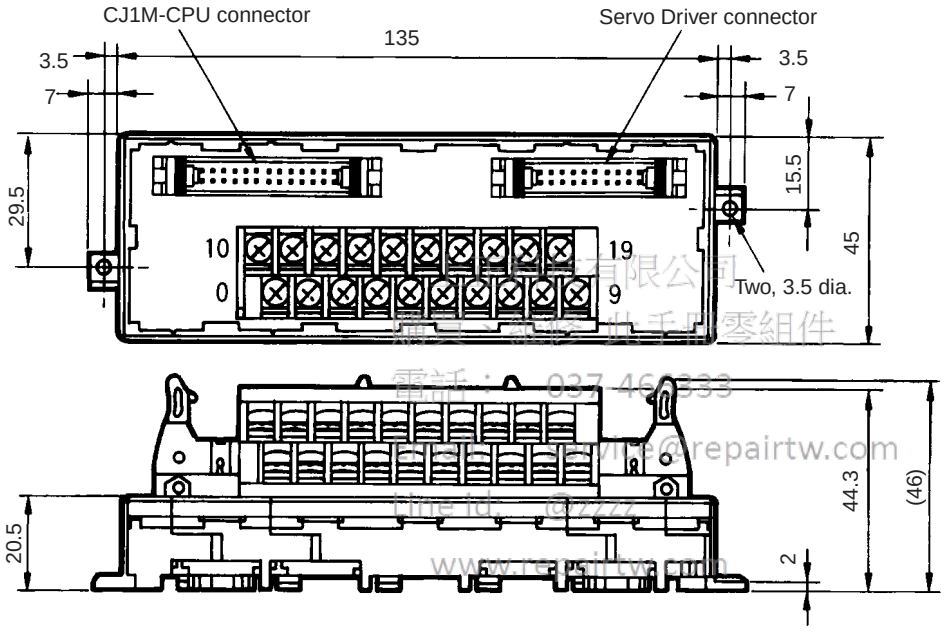

有限公司
購買、銷售、出租工業零組件
電話：037 462 333
Email: service@repairtw.com
Line Id: @7222
www.repairtw.com

Note Terminal pitch: 7.62 mm

● Wiring

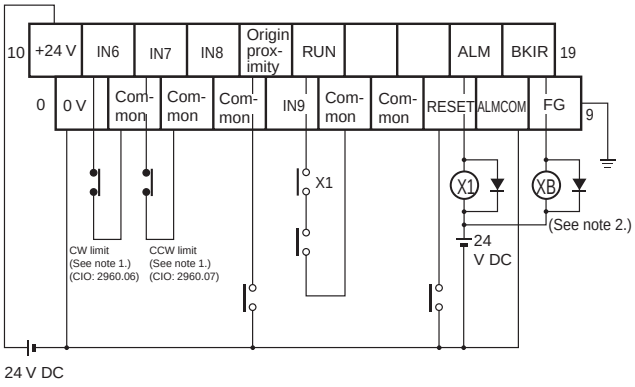

Note1. The CW limit input signal and CCW limit input signal can be input through an Input Unit. The following flags function as the CW/CCW limit input signals in the CJ1M:
Pulse Output 0: CW: A540.08, CCW: A540.09
Pulse Output 1: CW: A541.08, CCW: A541.09
Program the actual inputs from the Input Unit to control these flags as ladder program outputs as shown below.

Example:

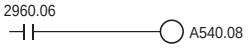

Note2. The XB contacts are used to turn ON/OFF the electromagnetic brake.

a) Do not connect anything to unused terminals.

b) The 0 V terminal is internally connected to the common terminals.

c) The following crimp terminal is applicable:
R1.25-3 (round with open end).

■ XW2B-40J6-9A

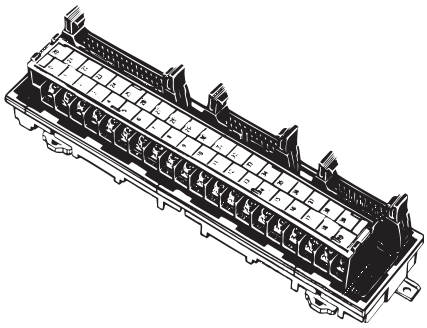

This Servo Relay Unit connects to the following OMRON Programmable Controllers. Communications are not supported.

- CJ1M-CPU21/-CPU22/-CPU23

● External Dimensions

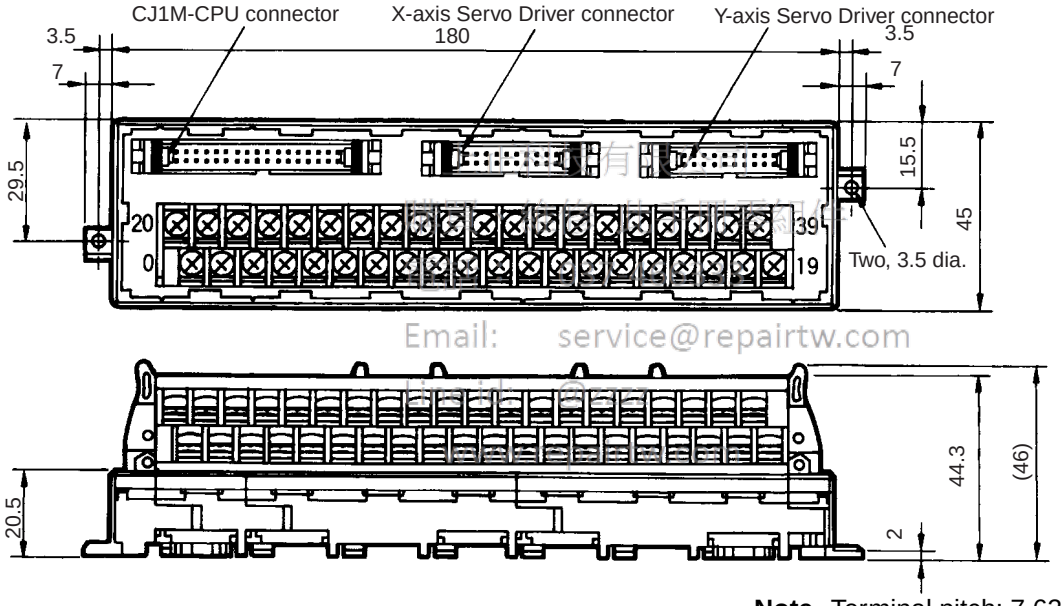

Email: service@repairtw.com

Note Terminal pitch: 7.62 mm

● Wiring

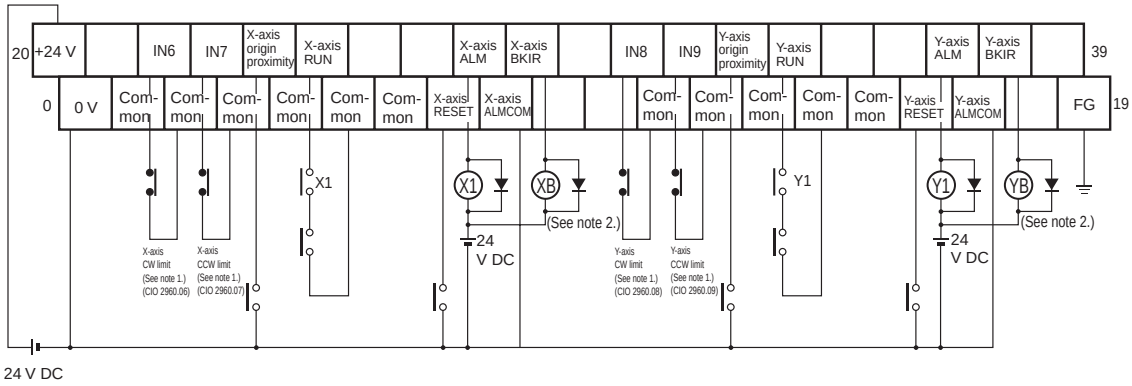

Note1. The CW limit input signal and CCW limit input signal can be input through an Input Unit. The following flags function as the CW/CCW limit input signals in the CJ1M:
Pulse Output 0: CW: A540.08, CCW: A540.09
Pulse Output 1: CW: A541.08, CCW: A541.09
Program the actual inputs from the Input Unit to control these flags as ladder program outputs as shown below.

Example:

上正科技有限公司
購買 維修 此手冊零組件
電話： 887-466333
Email: service@repairtw.com
Line id: @zzzz
www.repairtw.com

Note2. The XB contacts are used to turn ON/OFF the electromagnetic brake.

a) Do not connect anything to unused terminals.
b) The 0 V terminal is internally connected to the common terminals.
c) The following crimp terminal is applicable: R1.25-3 (round with open end).

■ XW2B-80J7-1A

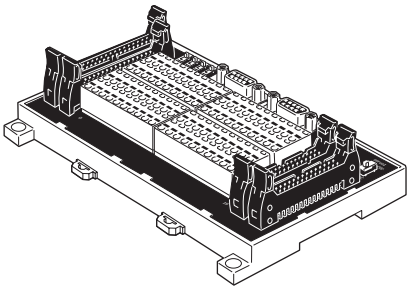

This Servo Relay Unit connects to the following OMRON Programmable Controllers.

- CS1W-HCP22-V1
- FQM1-MMP21

● External Dimensions

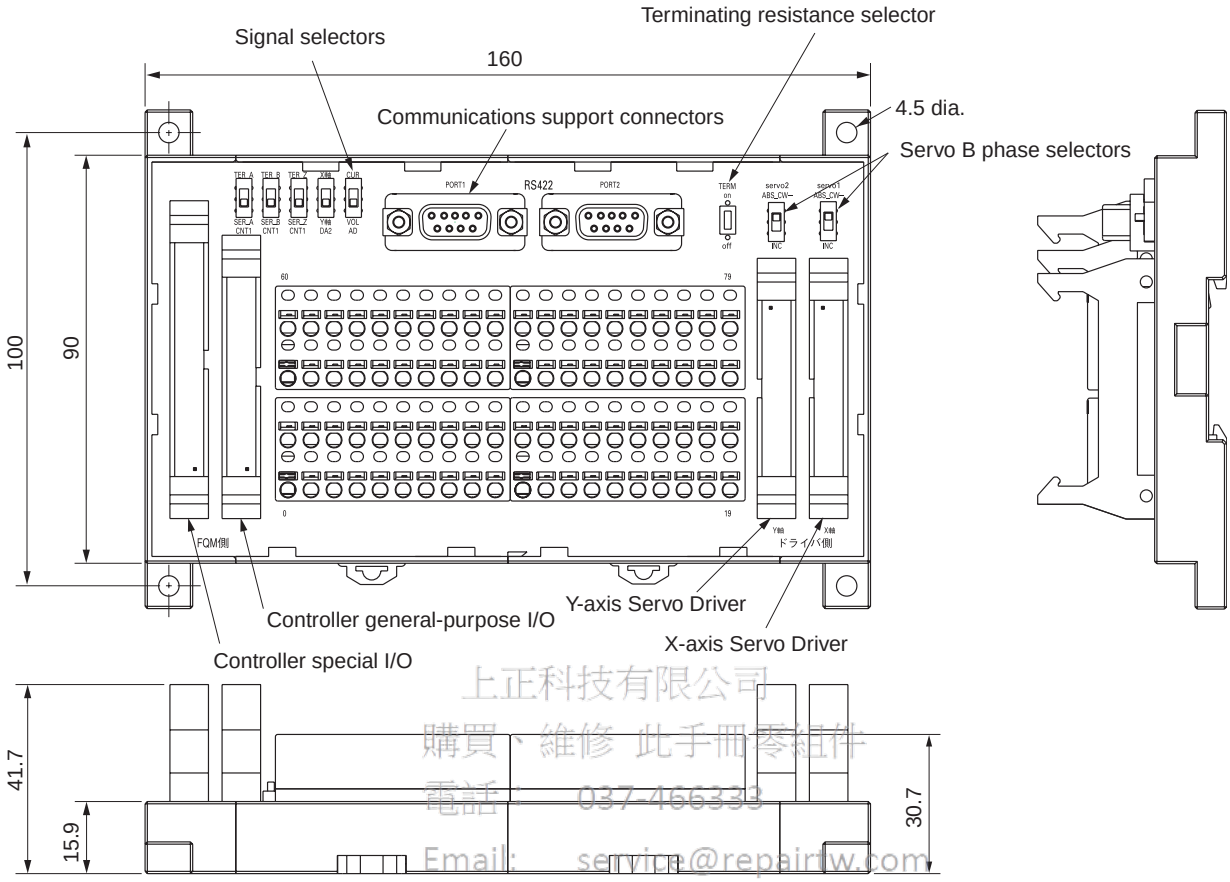

上正科技有限公司
購買、維修 此手冊零組件
電話: 037-466333
Email: service@repairtw.com
Line id: @zzzz
www.repairtw.com

● Terminal Block Connection

1. RS-422 Connector

Connect to an RS-422 line.

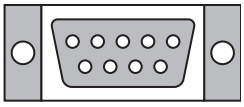

Pin No.	Signal name
1	TXD–
2	TXD+
3	---
4	---
5	---
6	RXD–
7	---
8	RXD+
9	---
Shell	FG

2. Screwless Clamp Terminal Blocks

Use the screwless clamp terminal blocks to wire controller general-purpose I/O and Servo Driver control signals.

上正科技有限公司
購買、維修、此手冊零組件
電話：07-461333
Email: service@eapanw.com
Line id: @zzz
www.eapanw.com

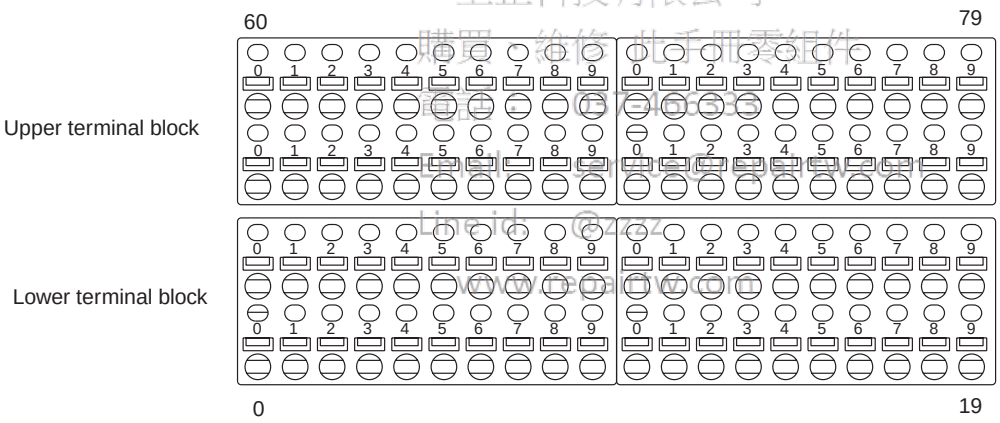

Upper Terminal Block Pin Arrangement

No.	60	61	62	63	64	65	66	67	68	69	70	71	72	73	74	75	76	77	78	79
Signal name	5 V (See note 1.)	Latch signal input 1	Latch signal input 2	CNT1 A phase LD + input	CNT1 B phase LD + input	Servo Driver #1 Z phase LD+ output	Voltage input (+)	Servo Driver #1 ALM	---	IN4	IN5	IN6	IN7	---	Servo Driver #1 RUN	Servo Driver #1 RESET	Servo Driver #1 ECRST	---	TXD+	RXD+
No.	40	41	42	43	44	45	46	47	48	49	50	51	52	53	54	55	56	57	58	59
Signal name	0 V	Latch signal 1 common (0 V)	Latch signal 2 common (0 V)	CNT1 A phase LD–	CNT1 B phase LD–	Servo Driver #1 Z phase LD–	Voltage input (–)	---	Common (0 V)	Common (0 V)	Common (0 V)	Common (0 V)	Common (0 V)	---	OUT0	OUT1	OUT2	OUT3	TXD–	RXD–

Lower Terminal Block Pin Arrangement

No.	20	21	22	23	24	25	26	27	28	29	30	31	32	33	34	35	36	37	38	39
Signal name	+24 V (See note 2.)	+24 V (See note 3.)	IN0	IN1	IN2	IN3	---	Servo Driver #2 ALM	Servo Driver #2 TGON	IN8	IN9	IN10	IN11	---	Servo Driver #2 RUN	Servo Driver #2 RESET	Servo Driver #2 ECRST	Servo Driver #2 MING	---	FG
No.	0	1	2	3	4	5	6	7	8	9	10	11	12	13	14	15	16	17	18	19
Signal name	0 V	0 V	Common (0 V)	Common (0 V)	Common (0 V)	Common (0 V)	---	Servo Driver #2 INP	Common (0 V)	Common (0 V)	Common (0 V)	Common (0 V)	Common (0 V)	---	OUT4	OUT5	OUT6	OUT7	---	FG

Note 1. Used for the pulse output power supply for the FQM1-MMP21.

Note 2. IN4 to IN11 and OUT0 to OUT7 are used for the Servo control power supply.

Note 3. IN0 to IN3 are used for the latch input power supply.

3. Signal Selectors

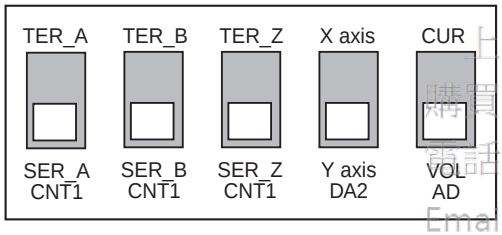

上正科技有限公司
購買、維修 此手冊零組件
電話： 037-466333
Email: service@repairtw.com
Line Id: @zzzz
www.repairtw.com

Selector		Setting description
CNT1 SER_A	SER_A	Not used.
	TER_A	Connects phase A of an external encoder to the CNT1 phase A of the controller.
CNT1 SER_B	SER_B	Not used.
	TER_B	Connects phase A of an external encoder to the CNT1 phase B of the controller.
CNT1 SER_Z	SER_Z	Connects phase Z of Servo Driver #1 to the CNT1 phase Z of the controller.
	TER_Z	Outputs the phase-Z output of Servo Driver #1 from the terminals.
DA2	---	Not used. (Always set to the Y axis.)
AD	---	Not used.

4. Terminating Resistance Selector

Set this selector to ON if there is no wiring from port 2 of the Servo Relay Unit to port 1 of another Servo Relay Unit when the Servo Relay Unit is positioned at the end of an RS-422 line.

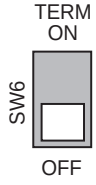

5. Servo Phase-B Selectors (Not Used)

Leave these selectors set to INC mode.

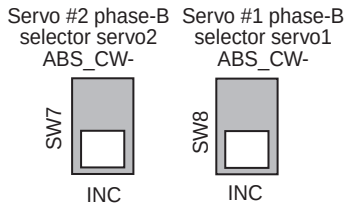

■ Wiring to Screwless Clamp Terminal Blocks

Screwless clamp terminal blocks enable wiring without securing the wires with screws. Special ferrules must be attached to the cables for sensors or external devices if sensors or external devices are also to be connected when wiring the Servo Driver and the control signal.

The following ferrules are applicable.

Manufacturer	Model	Applicable wire
Phoenix Contact	AI-0.5-10	0.5 mm^2 (20 AWG)
	AI-0.75-10	0.75 mm^2 (18 AWG)
	AI-1.5-10	1.25 mm^2 (16 AWG)
Nihon Weidmuller	H 0.5/16 D	0.5 mm^2 (20 AWG)
	H 0.75/16 D	0.75 mm^2 (18 AWG)
	H 1.5/16 D	1.25 mm^2 (16 AWG)

上正科技有限公司
購買、維修此型號零組件
電話： 03/-4863333
Email: service@repairtw.com
Line id: @zzzz
www.repairtw.com

● Wiring Procedure

Inserting a Wire

Fully insert the ferrule all the way into the desired terminal hole.

Releasing a Wire

Insert a small flathead screwdriver into the release button above the terminal hole, and pull out the wire while pressing the button.

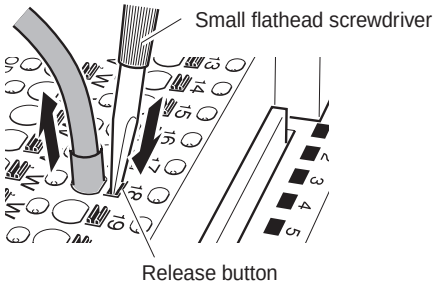

The following screwdriver can be used to release wires.

Recommended Screwdriver

Model	Manufacturer
SZF1	Phoenix Contact

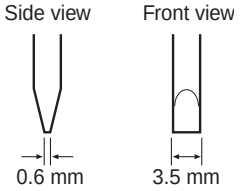

■ Servo Relay Unit Wiring Example

I/O power is supplied from terminals 20-0, 21-1, and 60-40 when a Servo Relay Unit is used. As shown in the following example, wiring can be performed by simply connecting the signals.

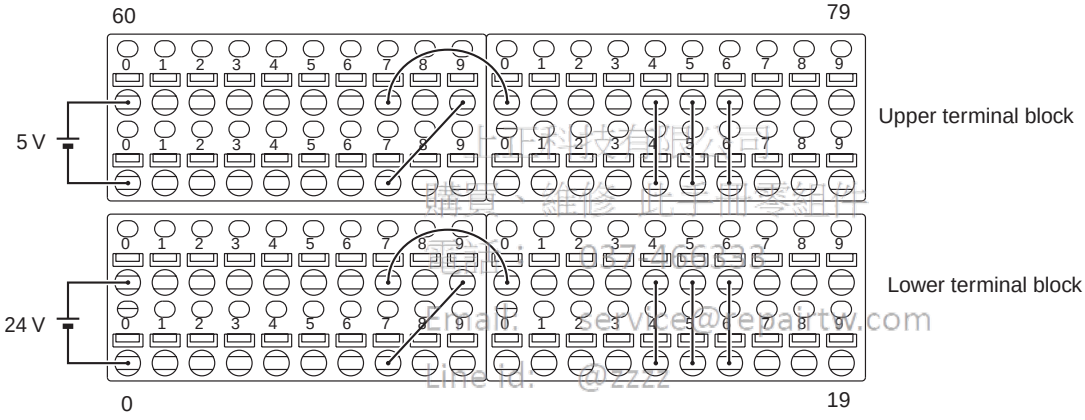

購買、維修 原廠零組件
電話：0937465236
Line Id: @2222
www.repairtw.com

Upper Terminal Block Pin Arrangement

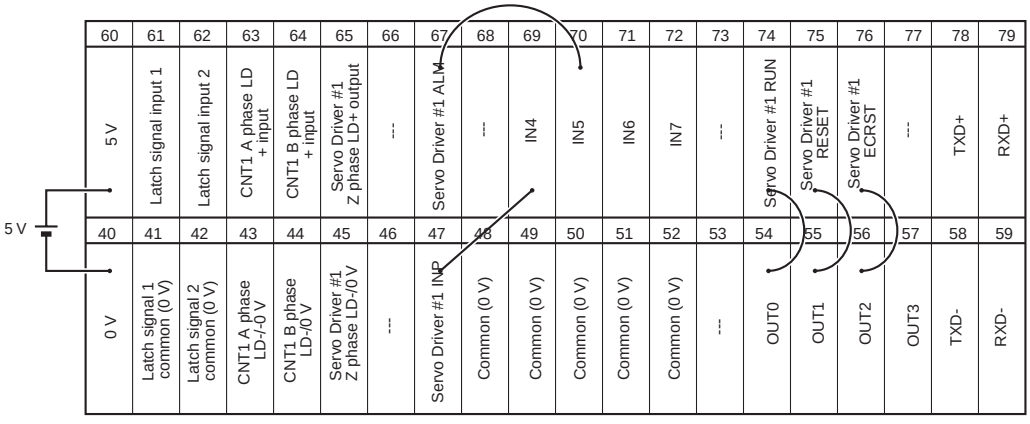

Lower Terminal Block Pin Arrangement

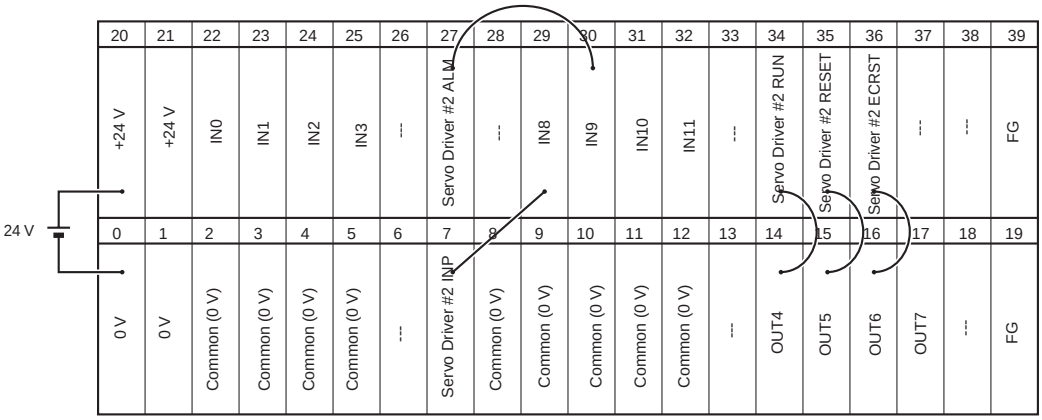

上正科技有限公司
購買、維修 此手冊零組件
電話： 037-466333
Email: service@repairtw.com
Line id: @zzzz
www.repairtw.com

2-7-2 Cables for Servo Relay Units

■ Servo Driver Cables (XW2Z-□J-B5)

These Servo Driver Cables connect a Servo Driver and a Servo Relay Unit. These Cables are used when connecting a Servo Relay Unit that does not support communications.

● Cable Models

Model	Length (L)	Outer diameter of sheath	Weight
XW2Z-100J-B5	1 m	8.0 dia.	Approx. 0.1 kg
XW2Z-200J-B5	2 m		Approx. 0.2 kg

● Connection Configuration and External Dimensions

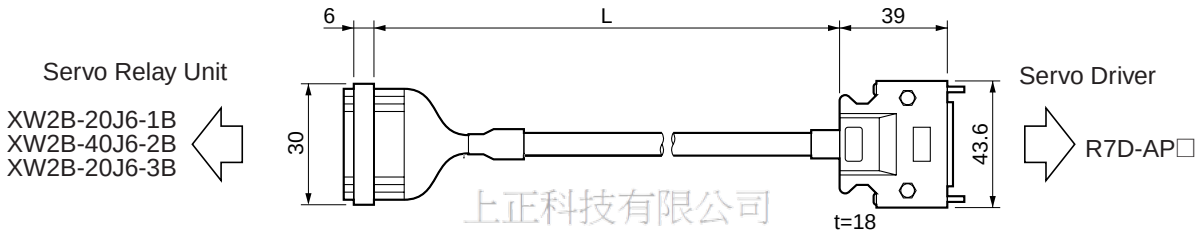

上正科技有限公司
購買、維修 此手冊零組件
電話： 037-466333
Email: service@repairtw.com
Line id: @zzzz
www.repairtw.com

● Wiring

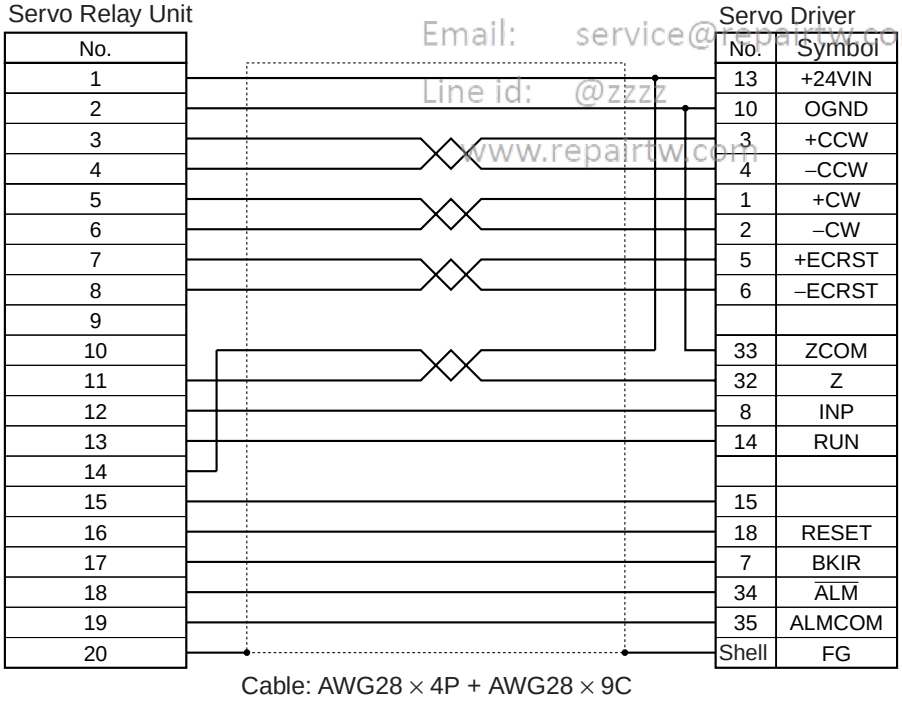

Cable: AWG28 × 4P + AWG28 × 9C

Connector plug:
10136-3000VE (Sumitomo 3M)
Connector case:
10336-52A0-008 (Sumitomo 3M)

■ Servo Driver Cables (XW2Z-□J-B7)

These Servo Driver Cables connect a Servo Driver and a Servo Relay Unit. These Cables are used when connecting a Servo Relay Unit that supports communications (XW2B-40J6-4A).

● Cable Models

Model	Length (L)	Outer diameter of sheath	Weight
XW2Z-100J-B7	1 m	8.0 dia.	Approx. 0.1 kg
XW2Z-200J-B7	2 m		Approx. 0.2 kg

● Connection Configuration and External Dimensions

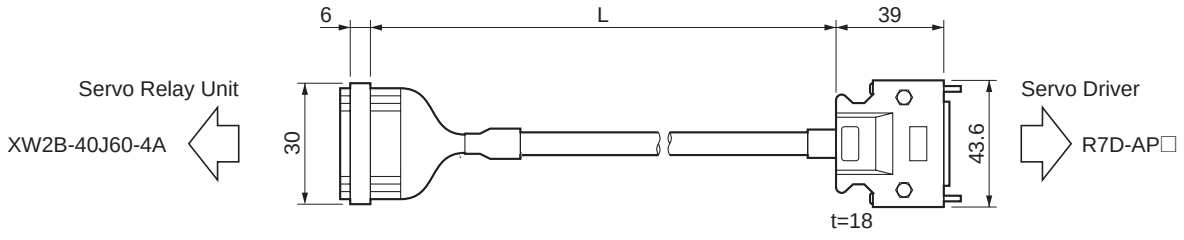

上正科技有限公司
購買、維修 此手冊零組件
電話： 037-46633-3
Email: service@repairtw.com
Line id: @zzzz
www.repairtw.com

● Wiring

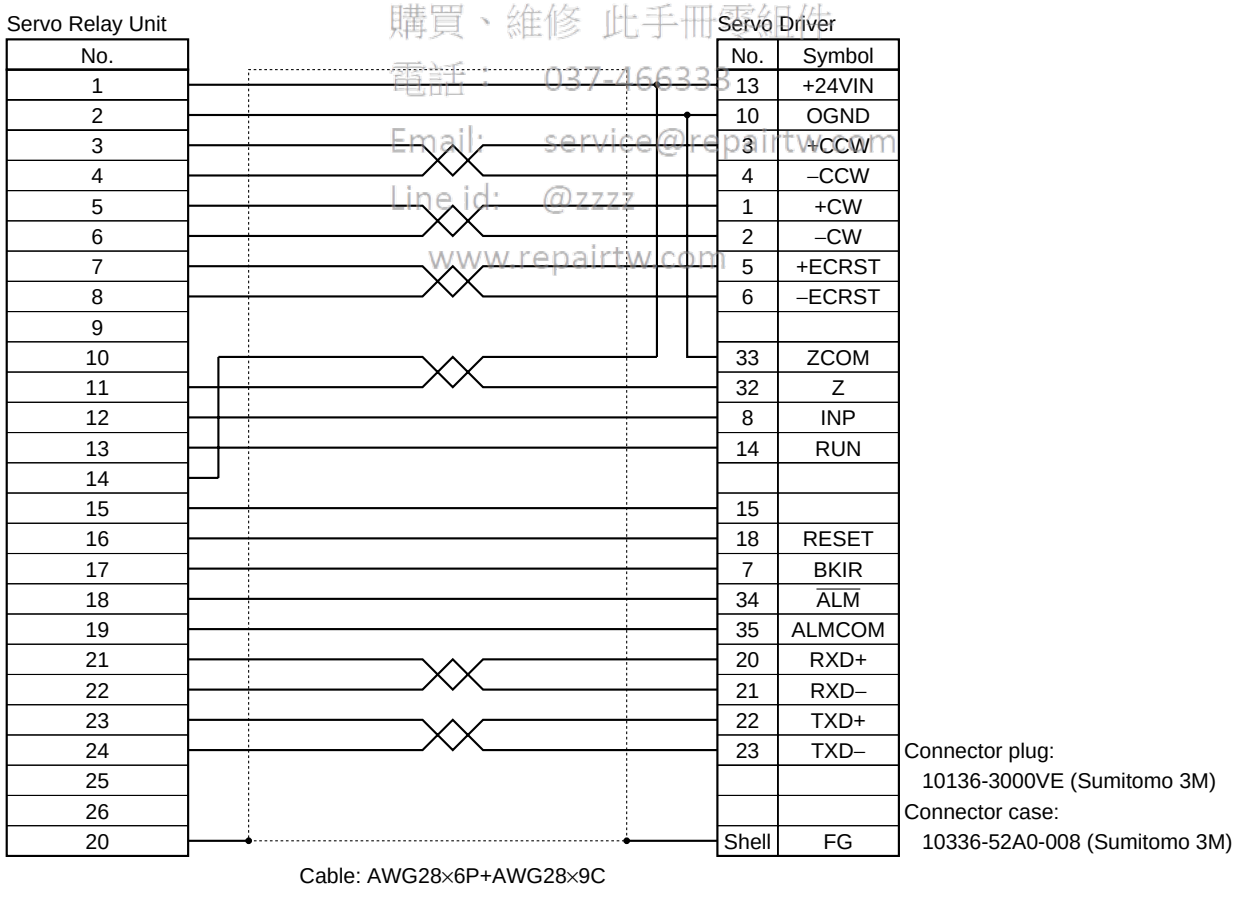

■ Servo Driver Cables (XW2Z-□□□J-B12)

These Servo Driver Cables connect a Servo Driver and a Servo Relay Unit. Use these cables to connect to a Customizable Counter Unit (CSW-HCP22-V1) or Servo Relay Unit (XW2B-80J7-1A).

● Cable Models

Model	Length (L)	Outer diameter of sheath	Weight
XW2Z-100J-B12	1 m	8.0 dia.	Approx. 0.1 kg
XW2Z-200J-B12	2 m		Approx. 0.2 kg

● Connection Configuration and External Dimensions

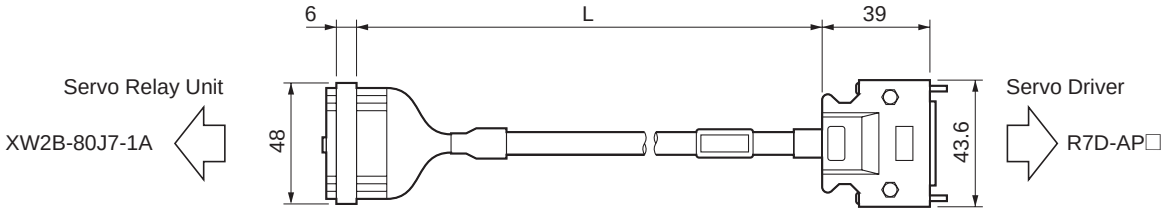

上正科技有限公司
購買、維修 此手冊零組件
電話： 037-466333
Email: service@repairtw.com
Line id: @zzzz
www.repairtw.com

● Wiring

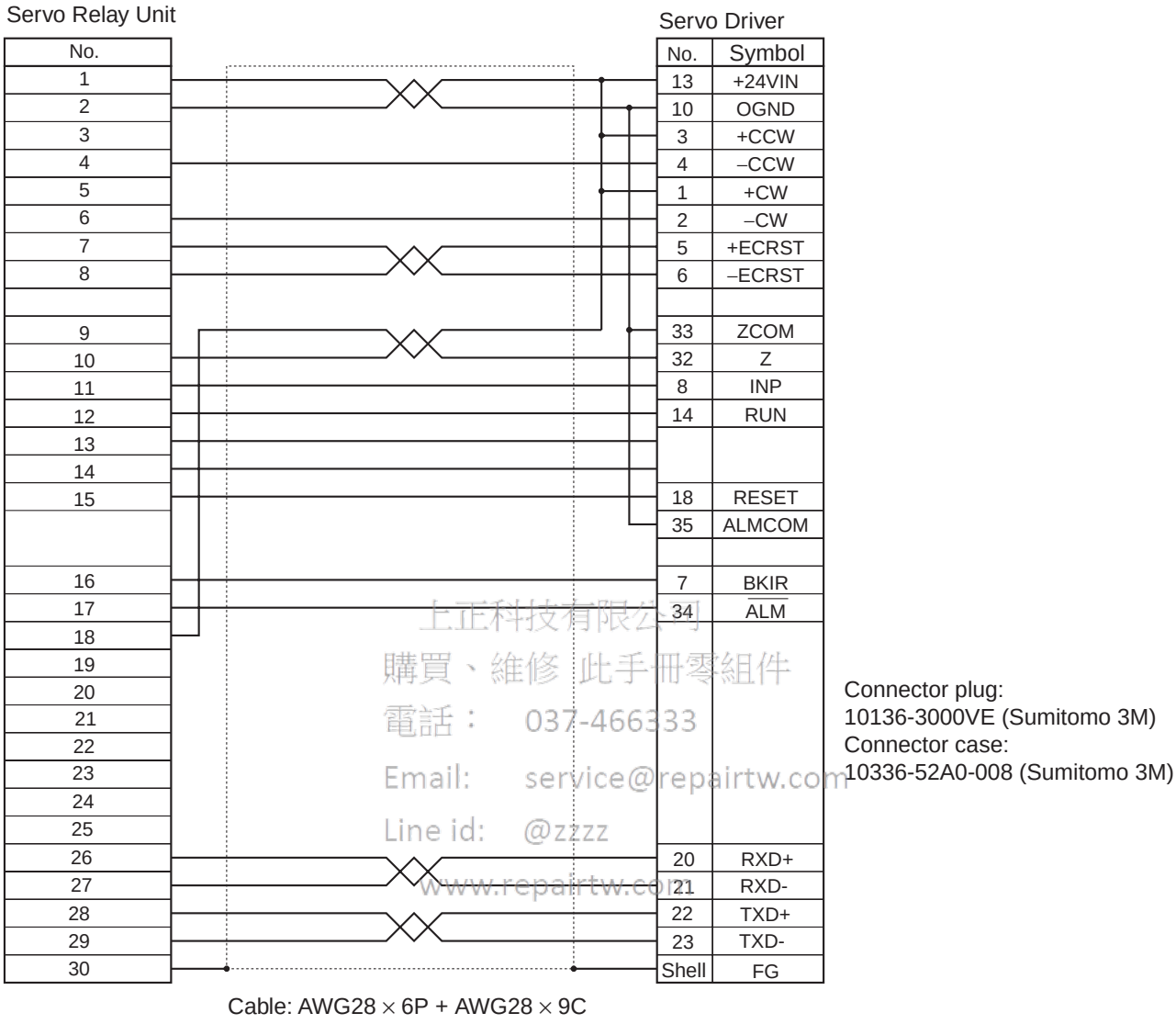

上正科技有限公司
購買、維修 此手冊零組件
電話： 037-466333
Email: service@repairtw.com
Line id: @zzzz
www.repairtw.com

■ Servo Driver Cables (XW2Z-□□□J-B10)

These Servo Driver Cables connect a Servo Driver and a Servo Relay Unit. Use these cables to connect to a Customizable Counter Unit (FQM1-MMP21) or Servo Relay Unit (XW2B-80J7-1A).

● Cable Models

Model	Length (L)	Outer diameter of sheath	Weight
XW2Z-100J-B10	1 m	8.0 dia.	Approx. 0.1 kg
XW2Z-200J-B10	2 m		Approx. 0.2 kg

● Connection Configuration and External Dimensions

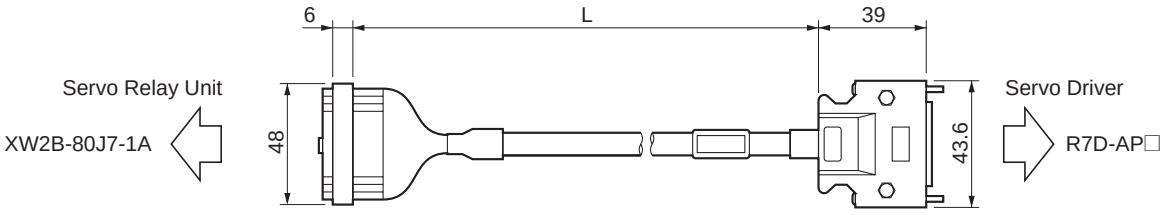

● Wiring

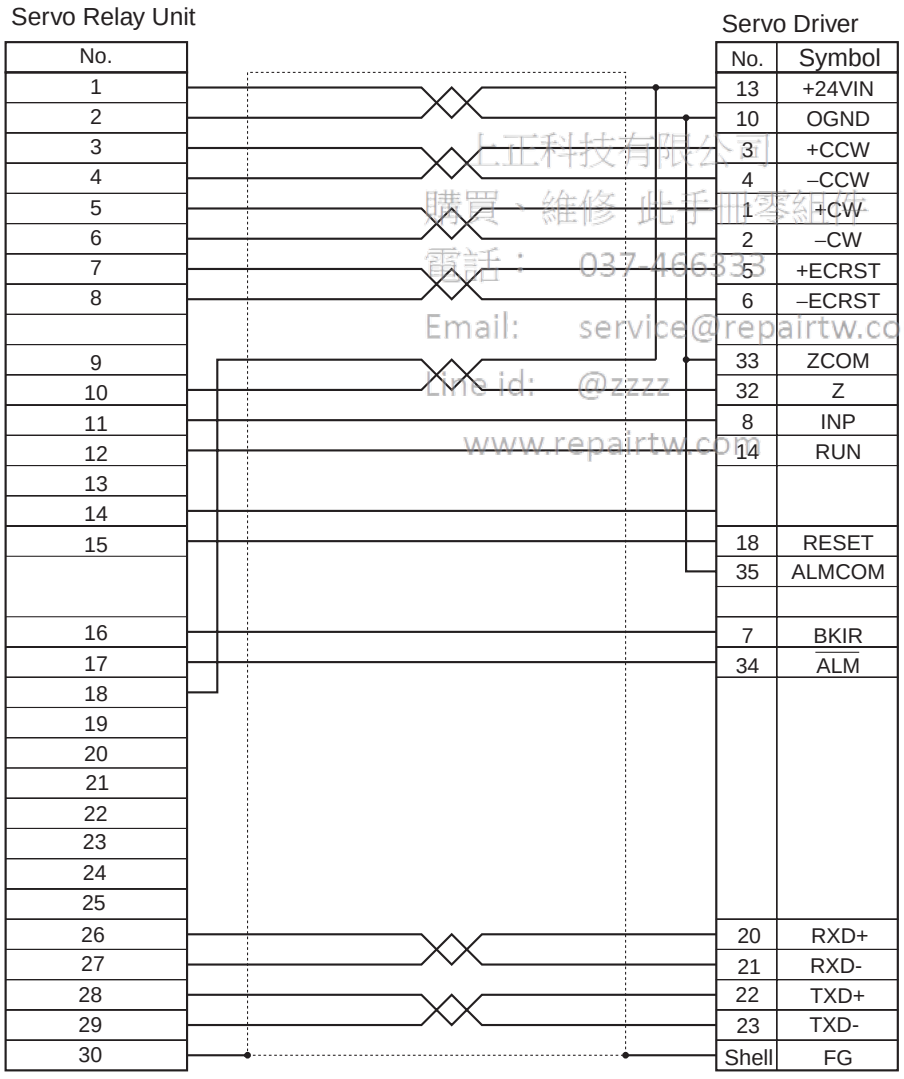

Connector plug:
10136-3000VE (Sumitomo 3M)
Connector case:
10336-52A0-008 (Sumitomo 3M)

Cable: AWG28 × 6P + AWG28 × 9C

上正科技有限公司
購買、維修 此手冊零組件
電話： 037-466333
Email: service@repairtw.com
Line id: @zzzz
www.repairtw.com

■ Position Control Unit Cables (XW2Z-□J-A3)

These Position Control Unit Cables connect a CQM1-CPU43-V1 or CQM1H-PLB21 Programmable Controller and an XW2B-20J6-3B Servo Relay Unit.

● Cable Models

Model	Length (L)	Outer diameter of sheath	Weight
XW2Z-050J-A3	50 cm	7.5 dia.	Approx. 0.1 kg
XW2Z-100J-A3	1 m		Approx. 0.1 kg

● Connection Configuration and External Dimensions

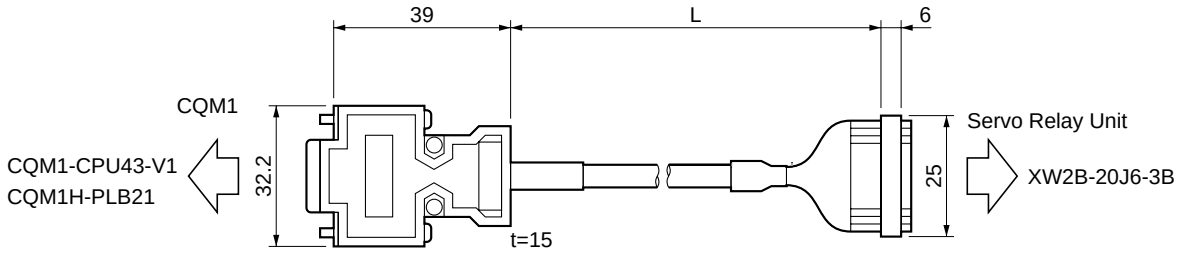

上正科技有限公司
購買、維修 此手冊零組件
電話： 037-466338
Email: service@repairtw.com
Line id: @zzzz
www.repairtw.com

● Wiring

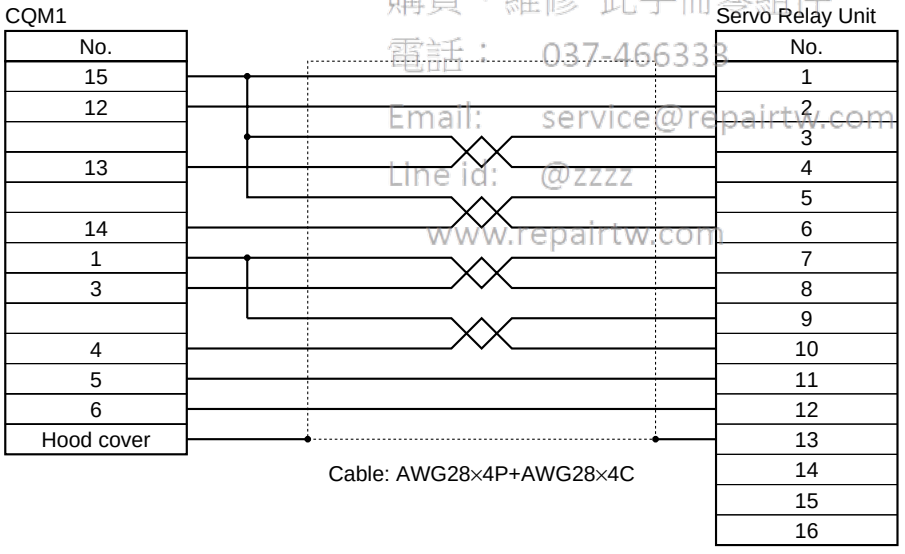

■ Position Control Unit Cables (XW2Z-□J-A4)

These Position Control Unit Cables connect a C200H-NC112 Position Control Unit and an XW2B-20J6-1B Servo Relay Unit.

● Cable Models

Model	Length (L)	Outer diameter of sheath	Weight
XW2Z-050J-A1	50 cm	8.0 dia.	Approx. 0.1 kg
XW2Z-100J-A1	1 m		Approx. 0.1 kg

● Connection Configuration and External Dimensions

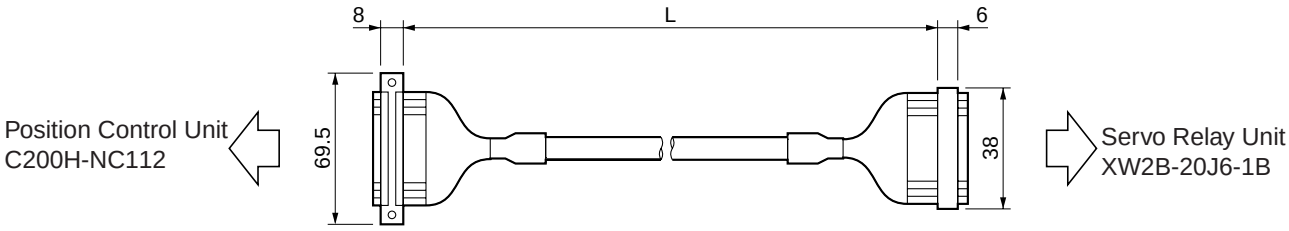

● Wiring

上正科技有限公司
購買、維修 此手冊零組件
電話： 037-466333
Email: service@repairtw.com
Line id: @zzzz
www.repairtw.com

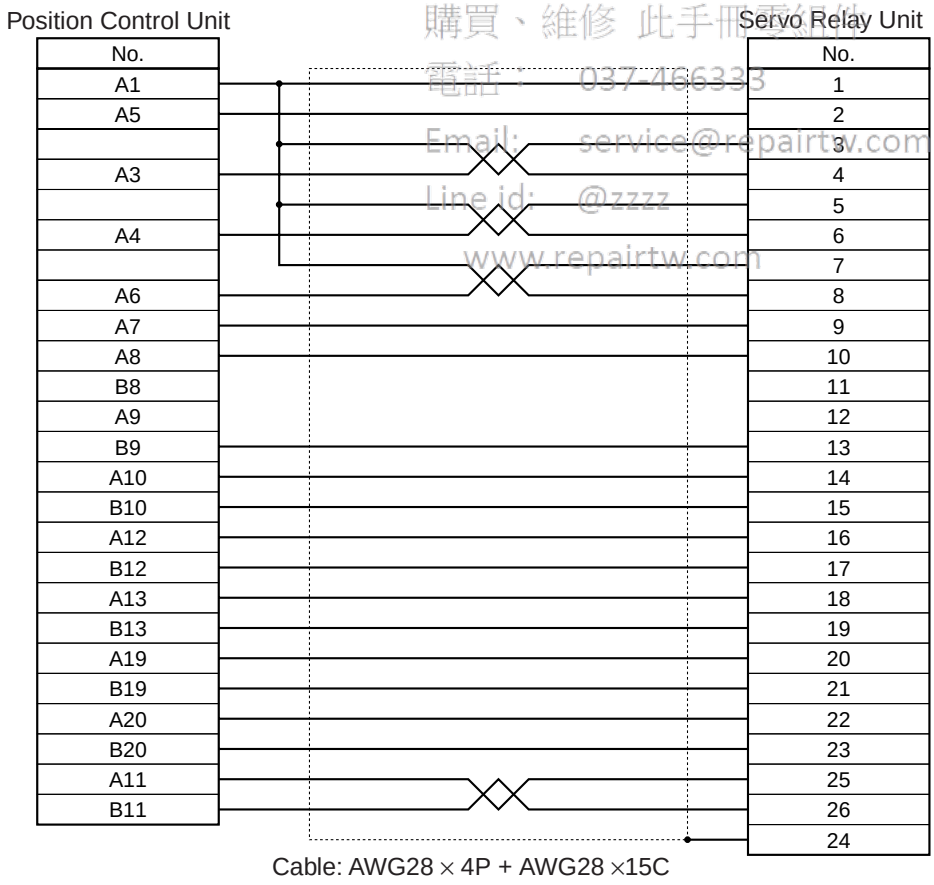

Cable: AWG28 × 4P + AWG28 ×15C

■ Position Control Unit Cable (XW2Z-□J-A5)

These Position Control Unit Cables connect a C200H-NC211, C500-NC113, or C500-NC211 Position Control Unit and an XW2B-40J6-2B Servo Relay Unit.

● Cable Models

Model	Length (L)	Outer diameter of sheath	Weight
XW2Z-050J-A5	50 cm	10.0 dia.	Approx. 0.1 kg
XW2Z-100J-A5	1 m		Approx. 0.2 kg

● Connection Configuration and External Dimensions

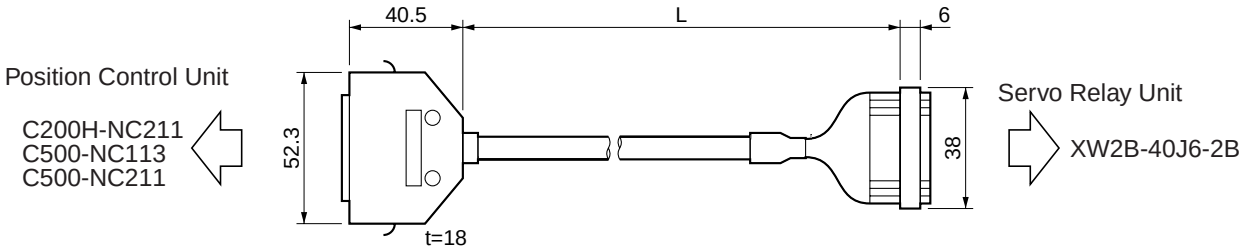

上正科技有限公司
購買、維修 此手冊零組件
電話： 037-466333
Email: service@repairtw.com
Line id: @zzzz
www.repairtw.com

● Wiring

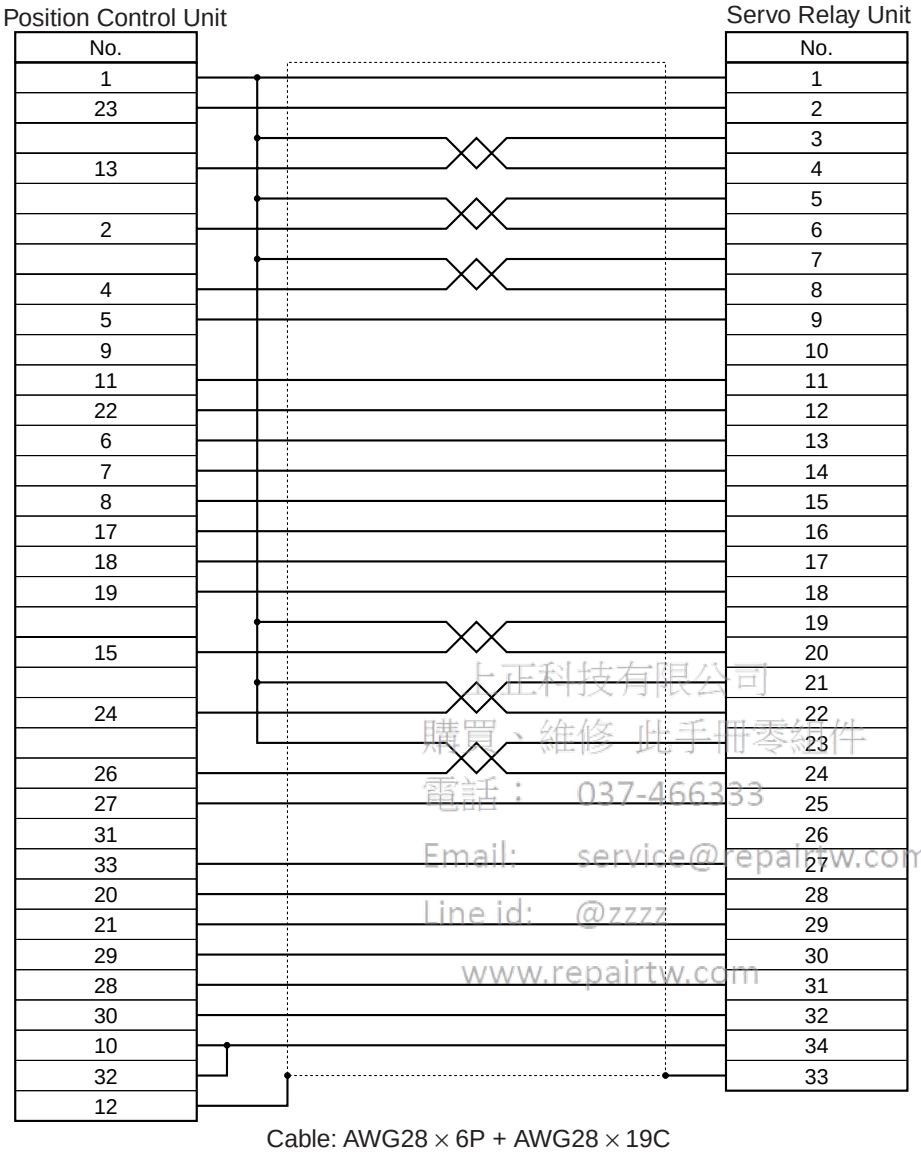

Cable: AWG28 × 6P + AWG28 × 19C

上正科技有限公司
購買、維修 此手冊零組件
電話： 037-466333
Email: service@repairtw.com
Line id: @zzzz
www.repairtw.com

■ Position Control Unit Cables (XW2Z-□J-A8)

These Position Control Unit Cables connect a CS1W-NC113 or C200HW-NC113 Position Control Unit and an XW2B-20J6-1B Servo Relay Unit.

● Cable Models

Model	Length (L)	Outer diameter of sheath	Weight
XW2Z-050J-A8	50 cm	8.0 dia.	Approx. 0.1 kg
XW2Z-100J-A8	1 m		Approx. 0.1 kg

● Connection Configuration and External Dimensions

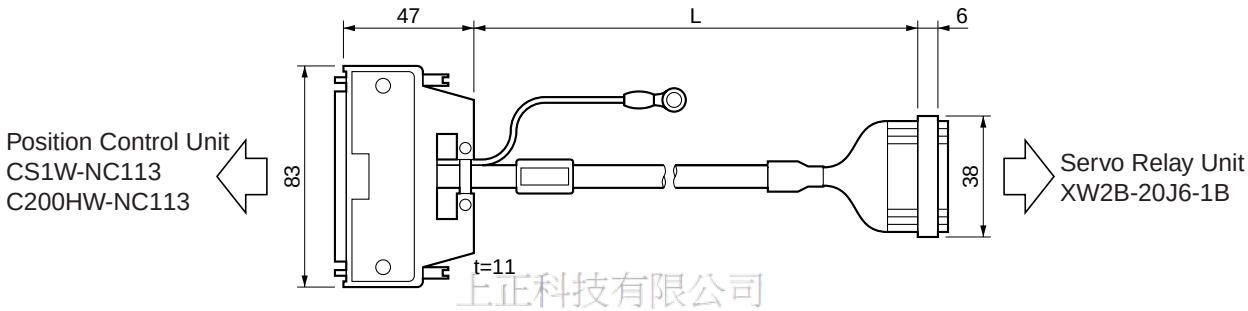

上正科技有限公司
購買、維修 此手冊零組件
電話： 037-466333
Email: service@repairtw.com
Line id: @zzzz
www.repairtw.com

● Wiring

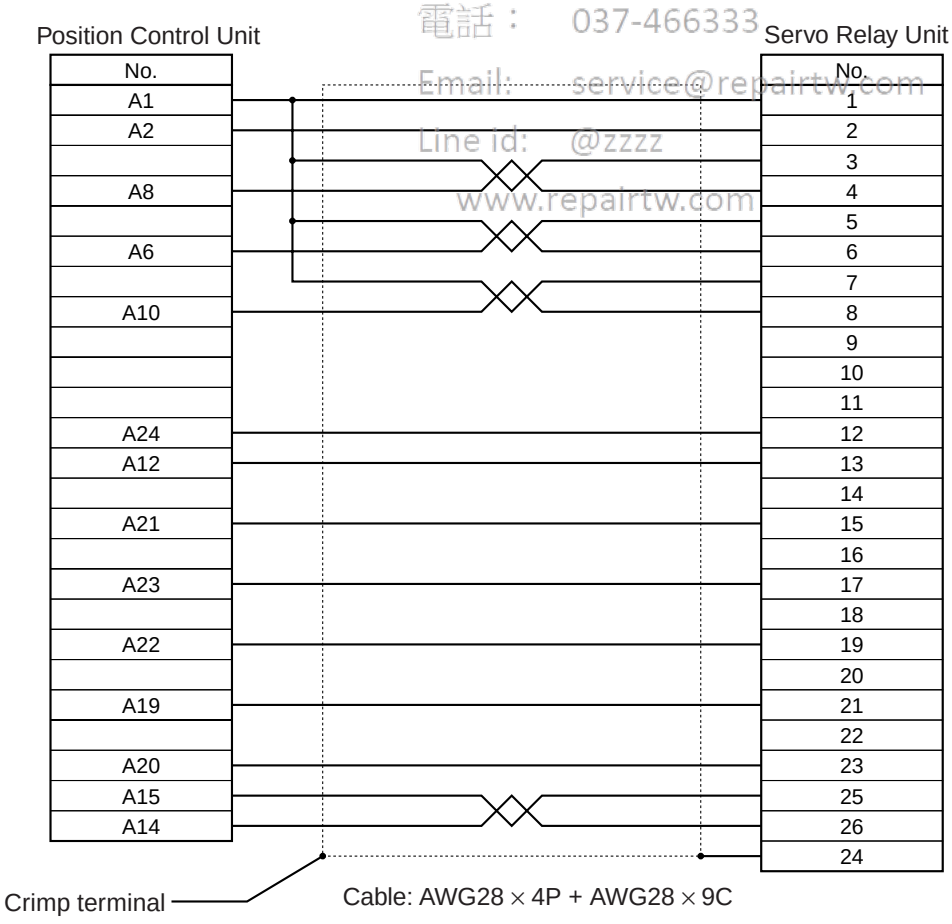

■ Position Control Unit Cables (XW2Z-□J-A9)

These Position Control Unit Cables connect a CS1W-NC213, CS1W-NC413, C200HW-NC213 or C200HW-NC413 Position Control Unit and an XW2B-40J6-2B or XW2B-40J6-4A Servo Relay Unit.

● Cable Models

Model	Length (L)	Outer diameter of sheath	Weight
XW2Z-050J-A9	50 cm	10.0 dia.	Approx. 0.1 kg
XW2Z-100J-A9	1 m		Approx. 0.2 kg

● Connection Configuration and External Dimensions

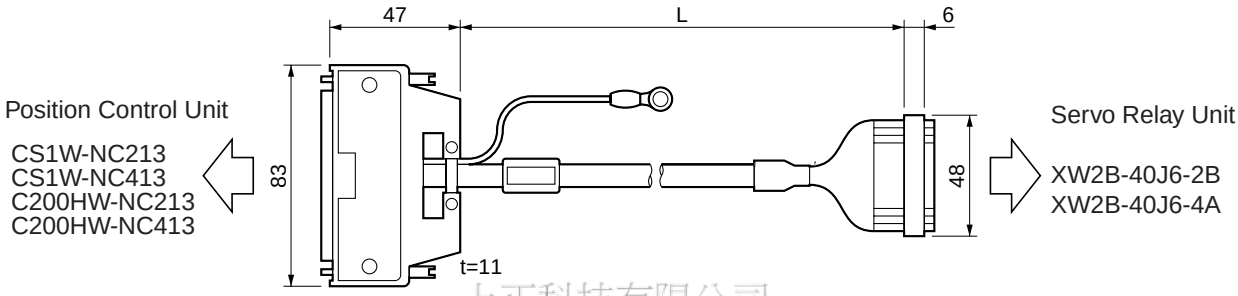

上正科技有限公司
購買、維修 此手冊零組件
電話： 037-466333
Email: service@repairtw.com
Line id: @zzzz
www.repairtw.com

● Wiring

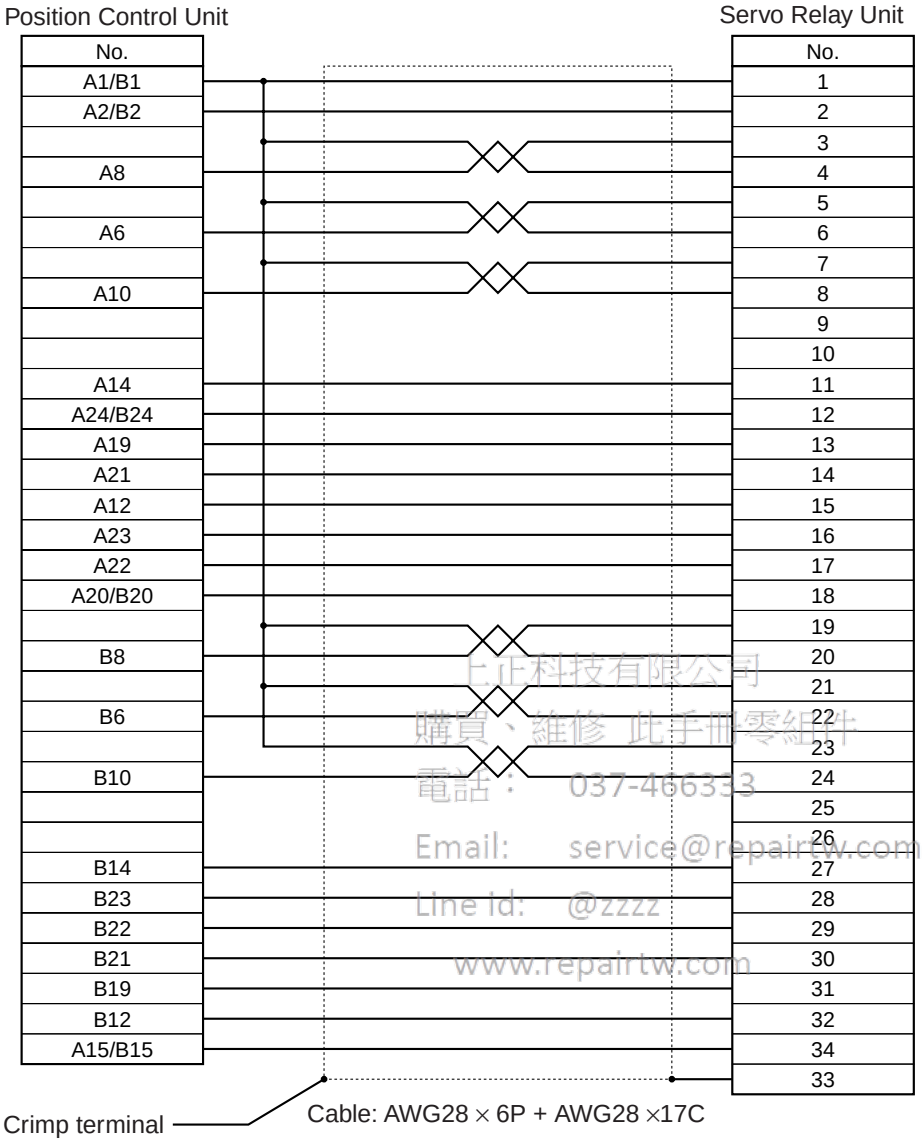

上正科技有限公司
購買、維修 此手冊零組件
電話： 037-466333
Email: service@repairtw.com
Line Id: @zzzz
www.repairtw.com

■ Position Control Unit Cables (XW2Z-□J-A12)

These Position Control Unit Cables connect a CS1W-NC133 Position Control Unit and an XW2B-20J6-1B Servo Relay Unit.

● Cable Models

Model	Length (L)	Outer diameter of sheath	Weight
XW2Z-050J-A12	50 cm	10.0 dia.	Approx. 0.1 kg
XW2Z-100J-A12	1 m		Approx. 0.2 kg

● Connection Configuration and External Dimensions

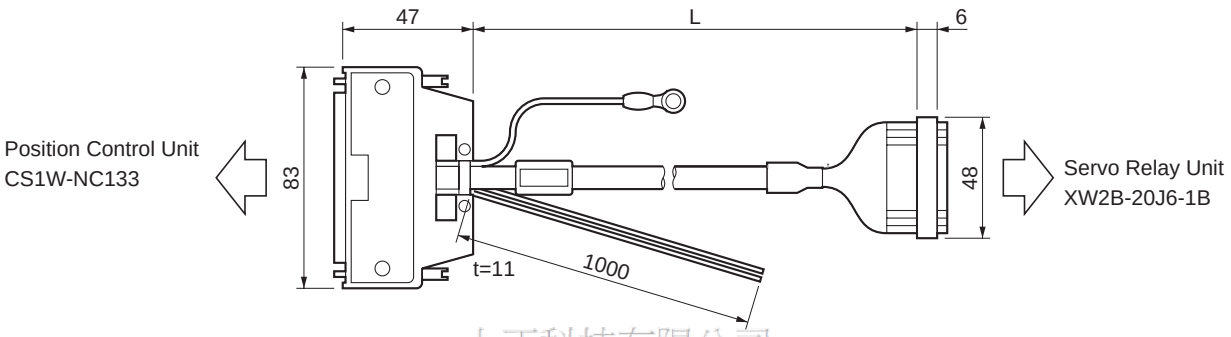

上正科技有限公司
購買、維修 此手冊零組件
電話： 037-466833
Email: service@repairtw.com
Line id: @zzzz
www.repairtw.com

● Wiring

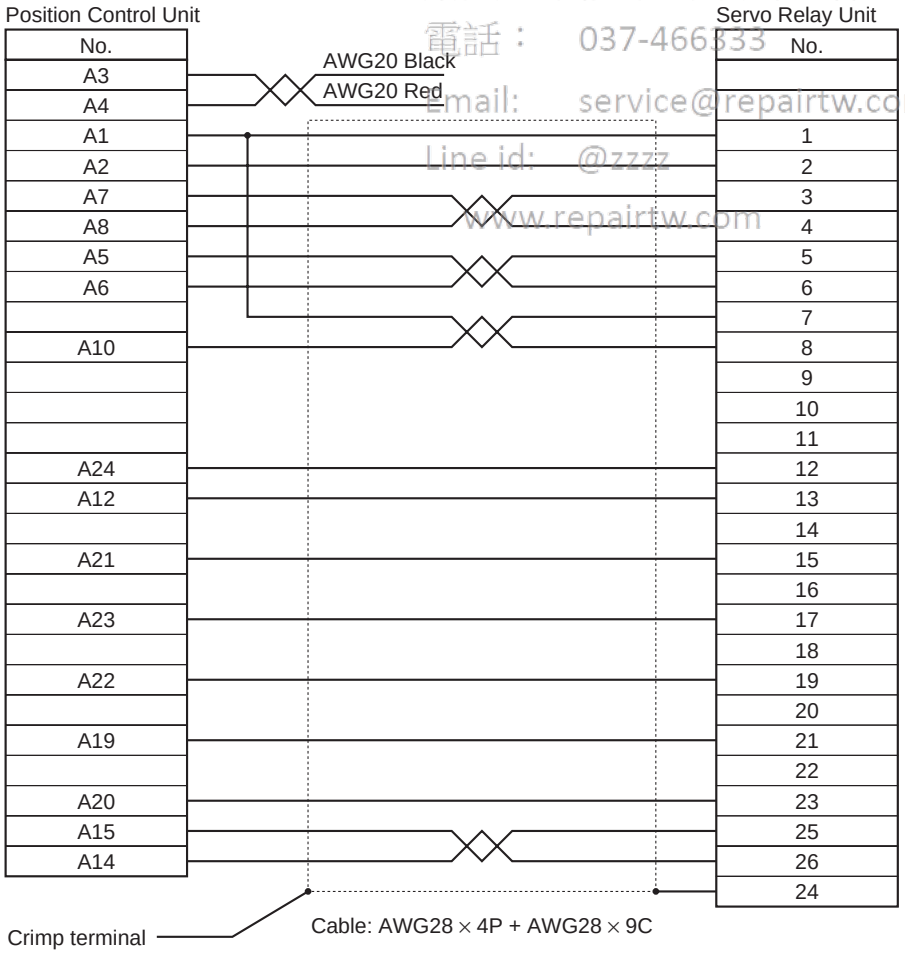

■ Position Control Unit Cables (XW2Z-□J-A13)

These Position Control Unit Cables connect a CS1W-NC233 or CS1W-NC433 Position Control Unit and an XW2B-40J6-2B or XW2B-40J6-4A Servo Relay Unit.

● Cable Models

Model	Length (L)	Outer diameter of sheath	Weight
XW2Z-050J-A13	50 cm	10.0 dia.	Approx. 0.1 kg
XW2Z-100J-A13	1 m		Approx. 0.2 kg

● Connection Configuration and External Dimensions

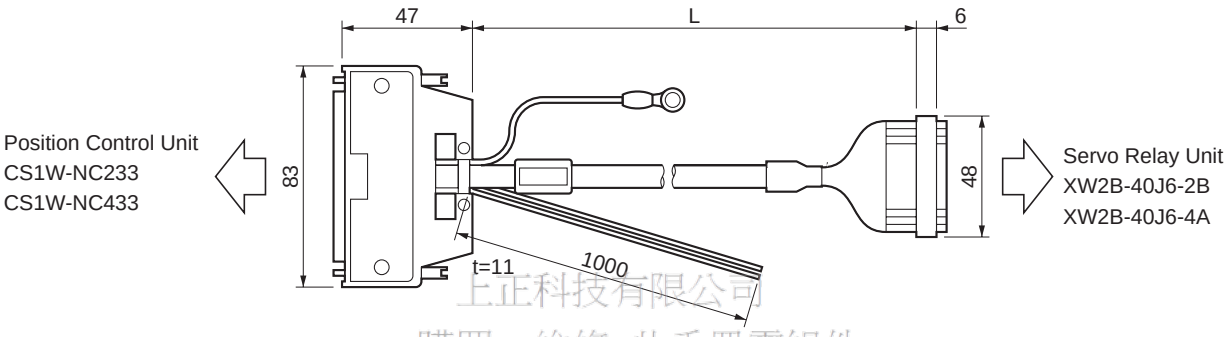

上正科技有限公司
購買、維修 此手冊零組件
電話： 037-466333
Email: service@repairtw.com
Line id: @zzzz
www.repairtw.com

● Wiring

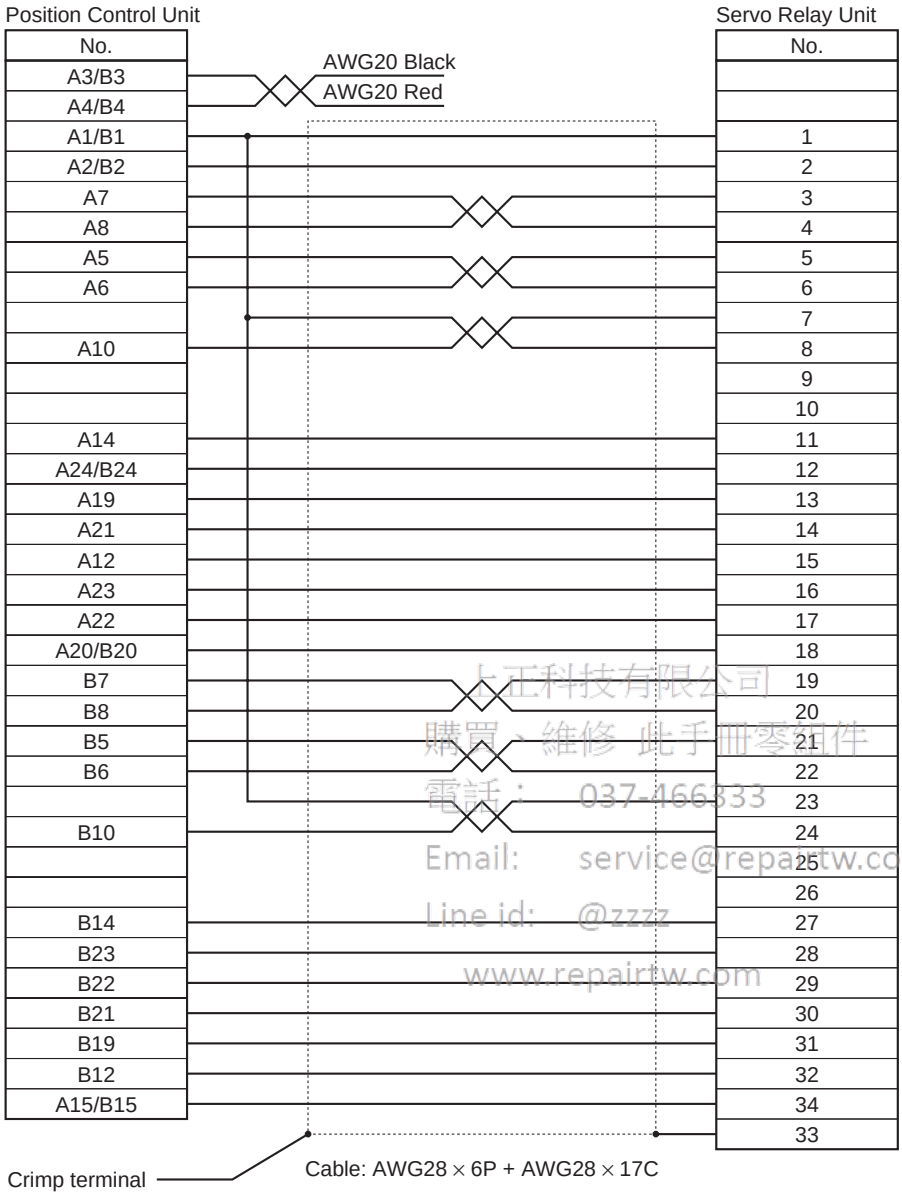

上正科技有限公司
購買、維修 此手冊零組件
電話： 037-466333
Email: service@repairtw.com
Line id: @zzzz
www.repairtw.com

■ Position Control Unit Cables (XW2Z□J-A16)

These Position Control Unit Cables connect a CJ1W-NC113 Position Control Unit and an XW2B-20J6-1B Servo Relay Unit.

● Cable Models

Model	Length (L)	Outer diameter of sheath	Weight
XW2Z-050J-A16	50 cm	10.0 dia.	Approx. 0.1 kg
XW2Z-100J-A16	1 m		Approx. 0.2 kg

● Connection Configuration and External Dimensions

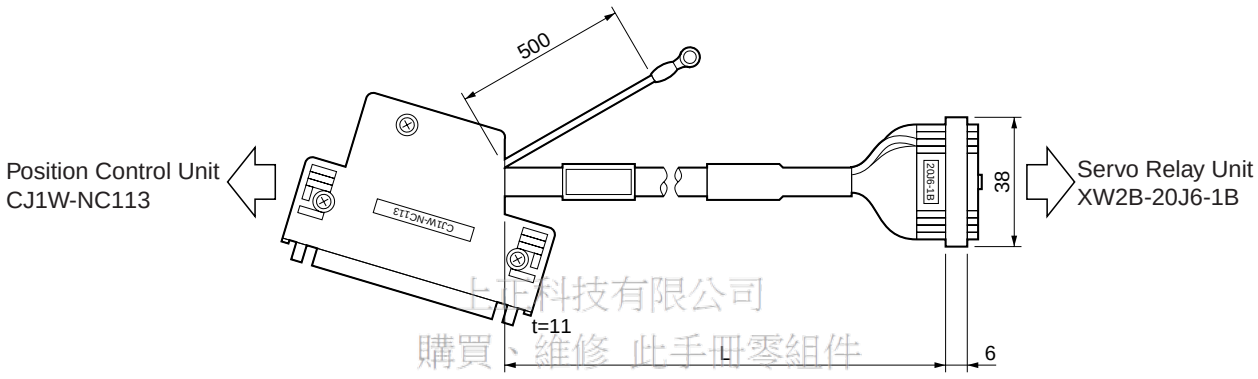

上正科技有限公司
購買、維修 此手冊零組件
電話： 037-466333
Email: service@repairtw.com
Line id: @zzzz
www.repairtw.com

● Wiring

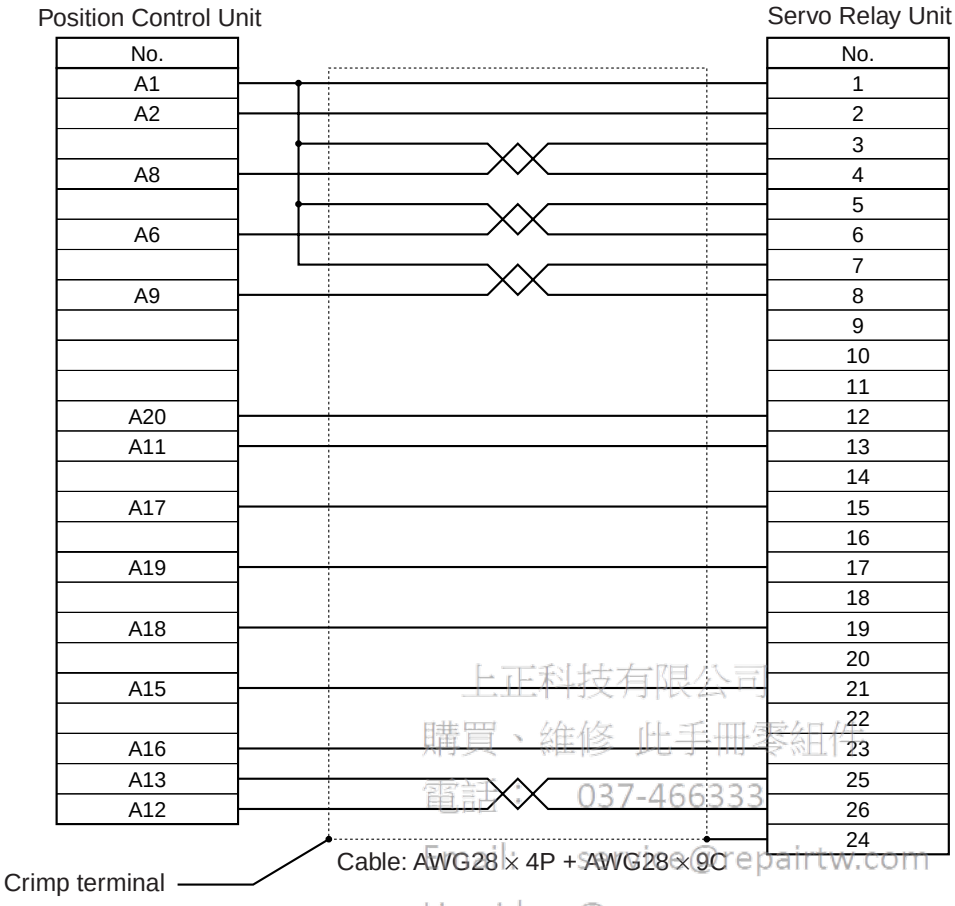

上正科技有限公司
購買、維修 此手冊零組件
電話： 037-466333
Email: service@repairtw.com
Line id: @zzzz
www.repairtw.com

■ Position Control Unit Cables (XW2Z□J-A17)

These Position Control Unit Cables connect a CJ1W-NC213 or CJ1W-NC413 Position Control Unit and an XW2B-40J6-2B or XW2B-40J6-4A Servo Relay Unit.

● Cable Models

Model	Length (L)	Outer diameter of sheath	Weight
XW2Z-050J-A17	50 cm	10.0 dia.	Approx. 0.1 kg
XW2Z-100J-A17	1 m		Approx. 0.2 kg

● Connection Configuration and External Dimensions

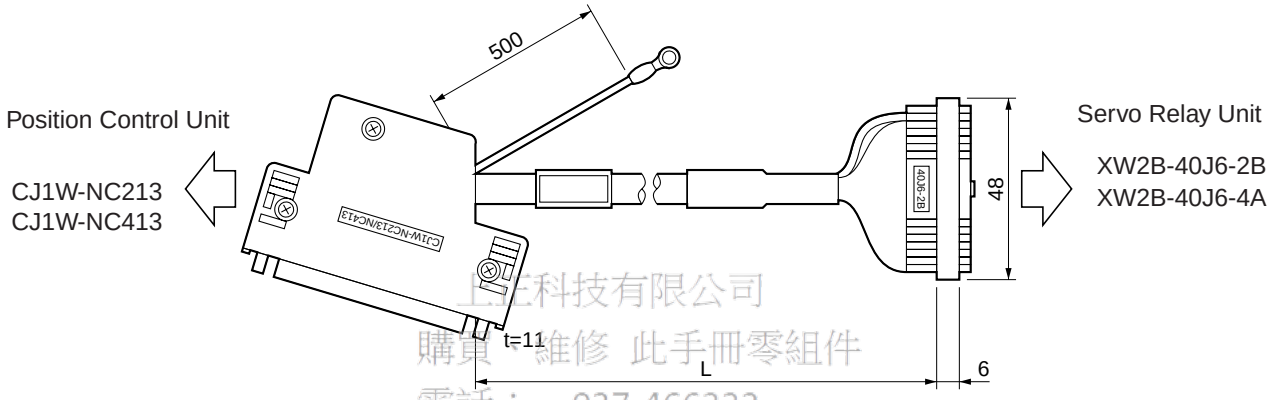

正達科技有限公司
購買、維修 此手冊零組件
電話： 037-466333
Email: service@repairtw.com
Line id: @zzzz
www.repairtw.com

● Wiring

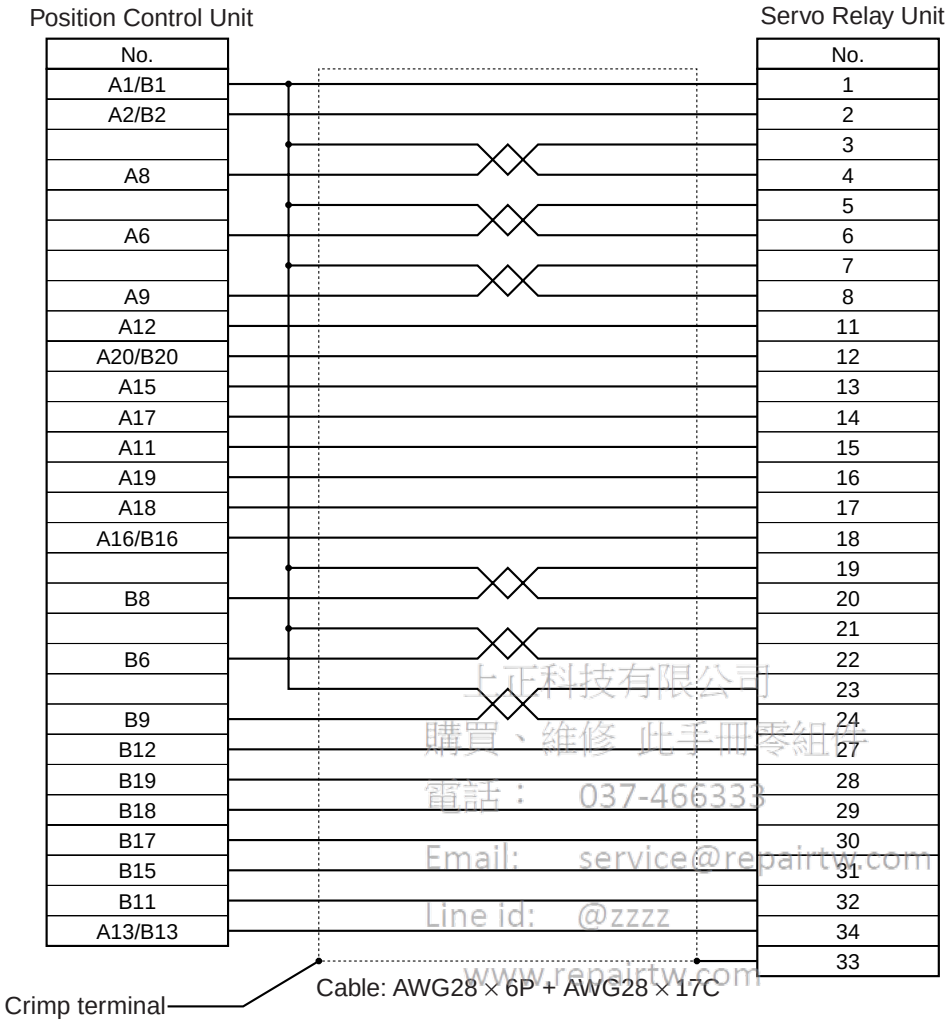

上正科技有限公司
購買、維修 此手冊零組件
電話： 037-466333
Email: service@repairtw.com
Line id: @zzzz
www.repairtw.com

■ Position Control Unit Cables (XW2Z-□J-A20)

These Position Control Unit Cables connect a CJ1W-NC133 Position Control Unit and an XW2B-20J6-1B Servo Relay Unit.

● Cable Models

Model	Length (L)	Outer diameter of sheath	Weight
XW2Z-050J-A20	50 cm	10.0 dia.	Approx. 0.1 kg
XW2Z-100J-A20	1 m		Approx. 0.2 kg

● Connection Configuration and External Dimensions

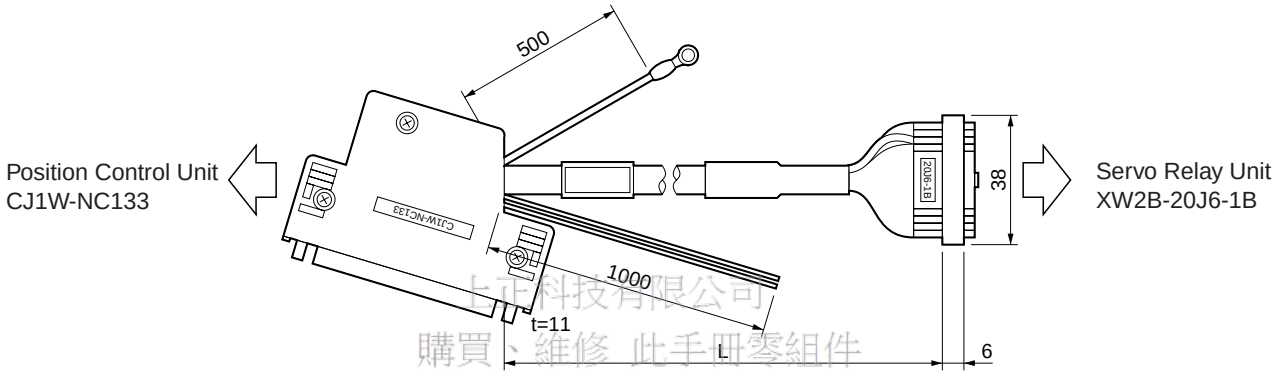

上正科技有限公司
購買、維修 此手冊零組件
電話： 037-466333
Email: service@repairtw.com
Line id: @zzzz
www.repairtw.com

● Wiring

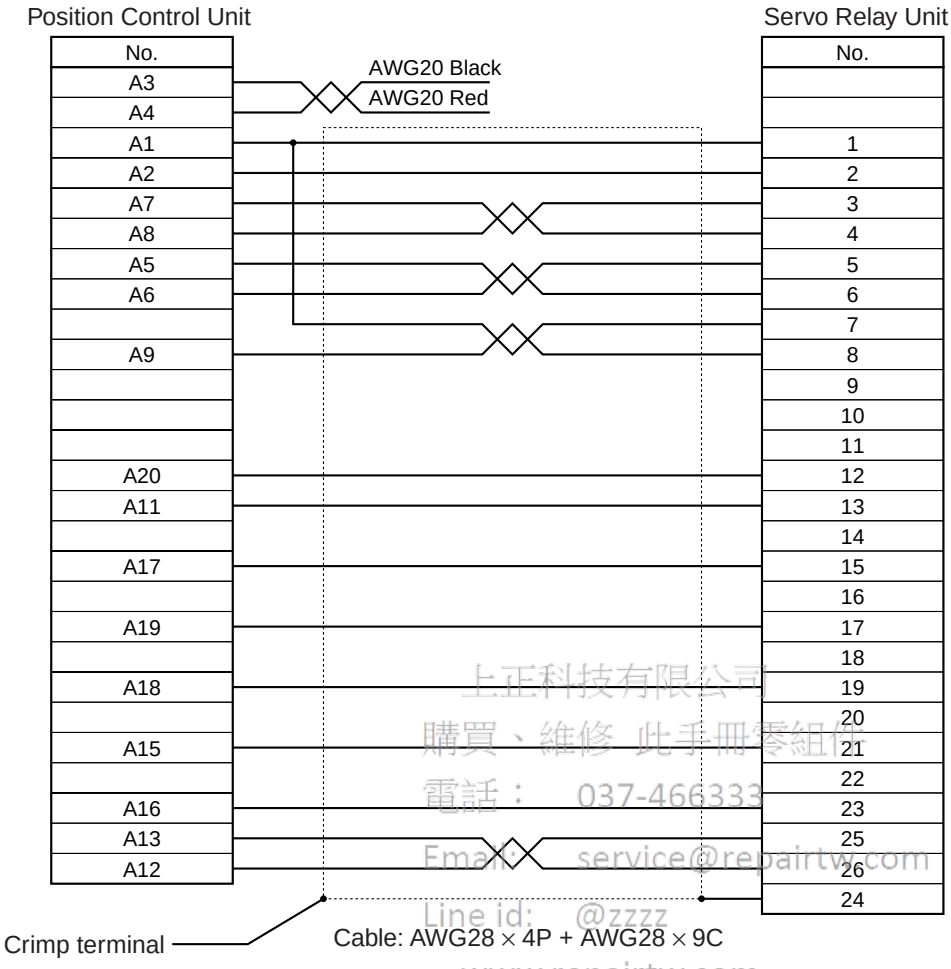

上正科技有限公司
購買、維修 此手冊零組件
電話： 037-466333
Email: service@repairtw.com
Line id: @zzzz
www.repairtw.com

■ Position Control Unit Cables (XW2Z-□J-A21)

These Position Control Unit Cables connect a CJ1W-NC233 or CJ1W-NC433 Position Control Unit and an XW2B-40J6-2B or XW2B-40J6-4A Servo Relay Unit.

● Cable Models

Model	Length (L)	Outer diameter of sheath	Weight
XW2Z-050J-A21	50 cm	10.0 dia.	Approx. 0.1 kg
XW2Z-100J-A21	1 m		Approx. 0.2 kg

● Connection Configuration and External Dimensions

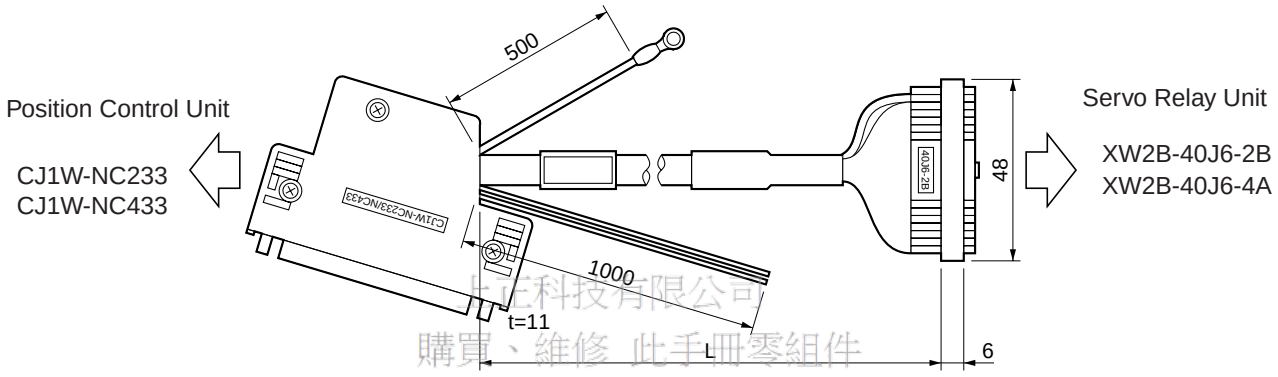

上正科技有限公司
購買、維修 此手冊零組件
電話： 037-466333
Email: service@repairtw.com
Line id: @zzzz
www.repairtw.com

● Wiring

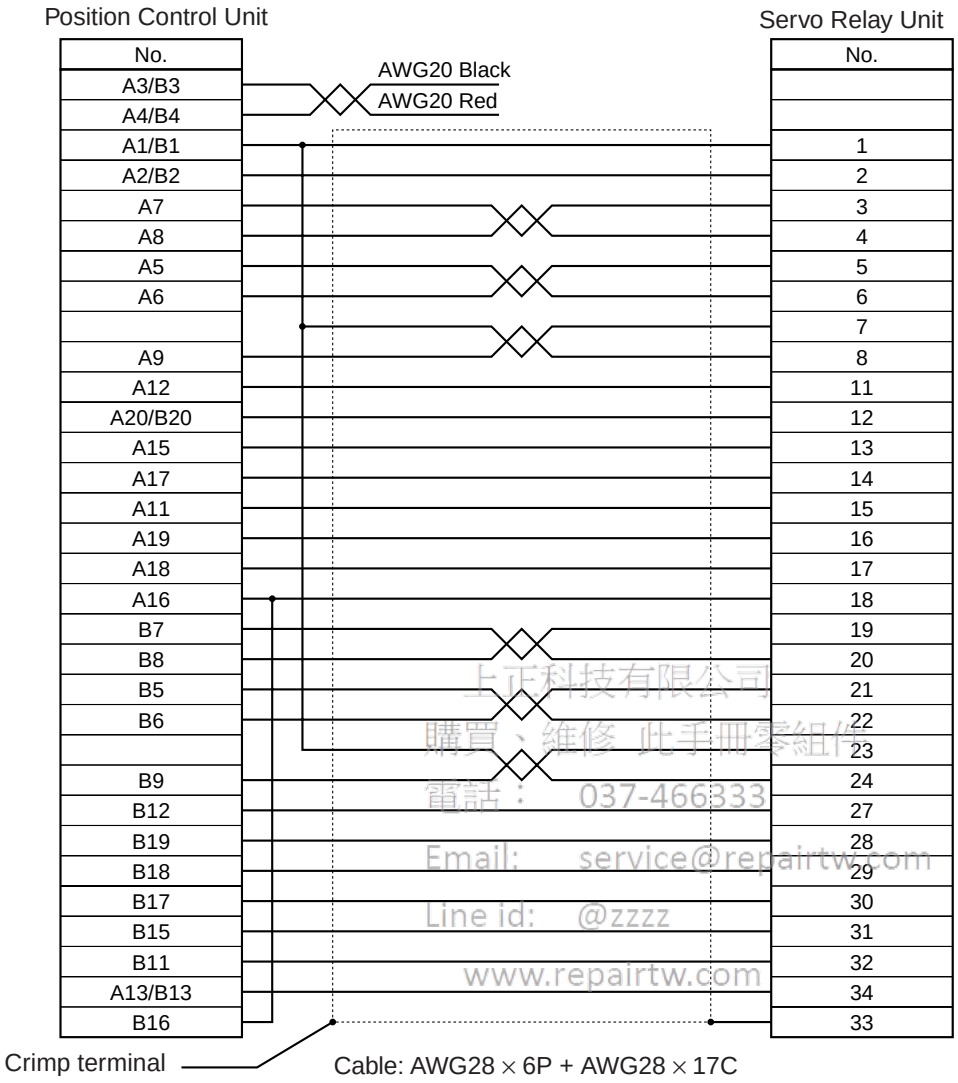

上正科技有限公司
購買、維修 此手冊零組件
電話： 037-466333
Email: service@repairtw.com
Line id: @zzzz
www.repairtw.com

■ Position Control Unit Cable (XW2Z-□J-A22)

These Position Control Unit Cables connect a CS1W-HCP22 Position Control Unit and an XW2B-20J6-3B Servo Relay Unit.

● Cable Models

Model	Length (L)	Outer diameter of sheath	Weight
XW2Z-050J-A22	50 cm	10.0 dia.	Approx. 0.1 kg
XW2Z-100J-A22	1 m		Approx. 0.2 kg

● Connection Configuration and External Dimensions

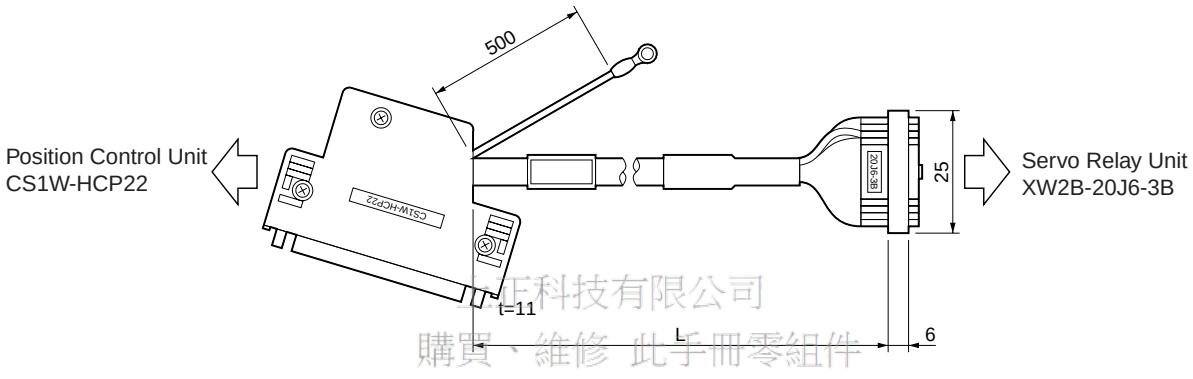

正昕科技有限公司
購買、維修 此手冊零組件
電話： 037-466333
Email: service@repairtw.com
Line id: @zzzz
www.repairtw.com

● Wiring

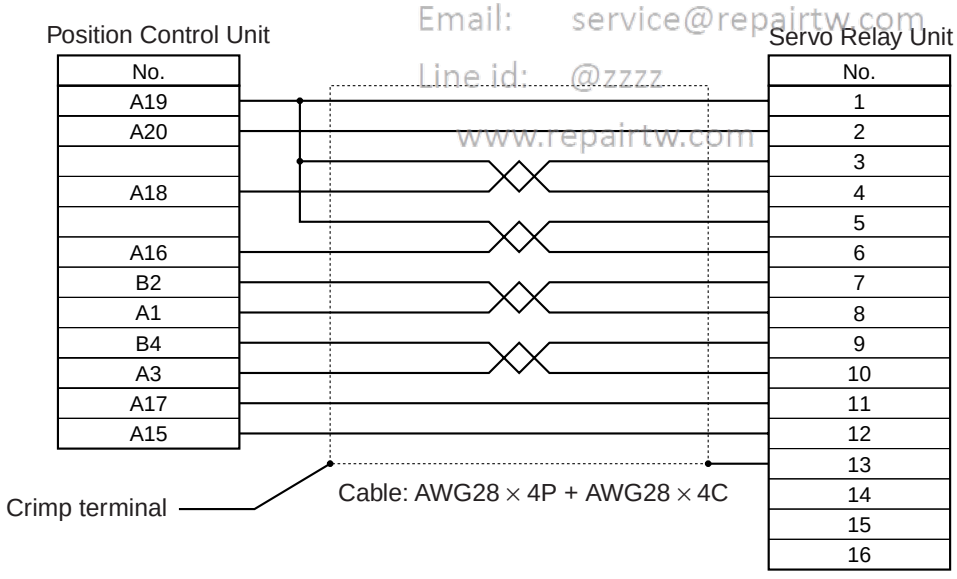

■ Position Control Unit Cables (XW2Z-□J-A23)

These Position Control Unit Cables connect a CS1W-HCP22 Position Control Unit and an XW2B-20J6-3B Servo Relay Unit.

● Cable Models

Model	Length (L)	Outer diameter of sheath	Weight
XW2Z-050J-A23	50 cm	10.0 dia.	Approx. 0.1 kg
XW2Z-100J-A23	1 m		Approx. 0.2 kg

● Connection Configuration and External Dimensions

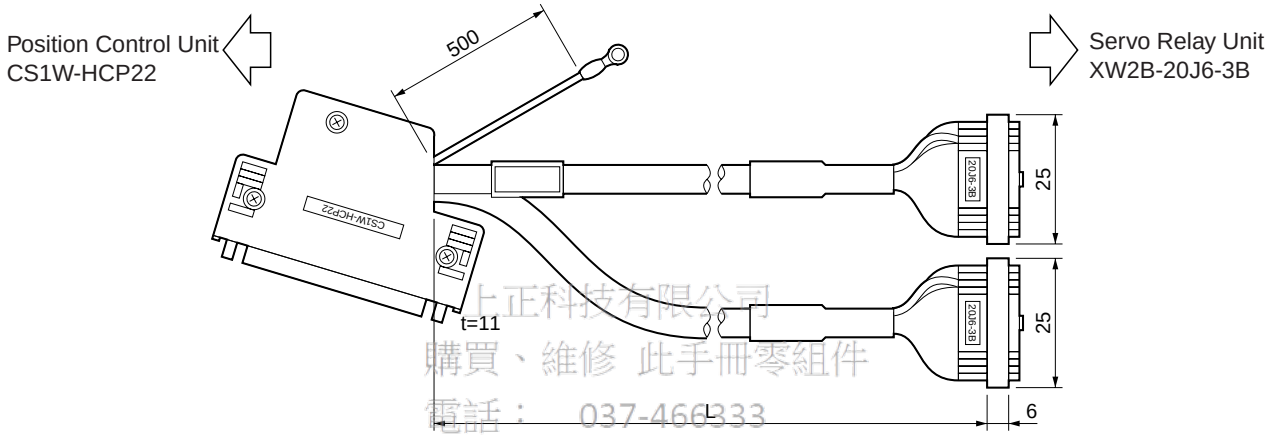

上正科技有限公司
購買、維修 此手冊零組件
電話： 037-466333
Email: service@repairtw.com
Line id: @zzzz
www.repairtw.com

● Wiring

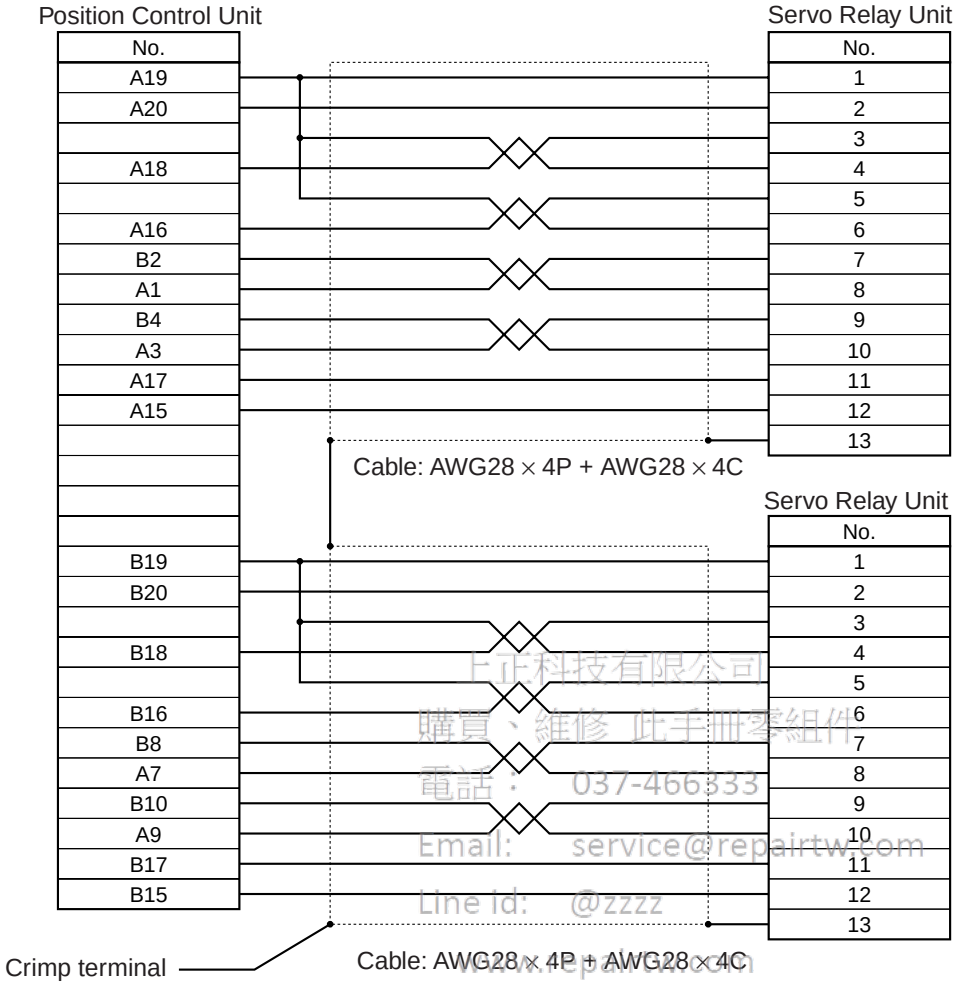

上正科技有限公司
購買、維修 此手冊零組件
電話： 037-466333
Email: service@repairtw.com
Line id: @zzzz
www.repairtw.com

■ Position Control Unit Cables (XW2Z-□J-A25)

These Position Control Unit Cables connect a 3F88M-DRT141 Single-shaft Positioner (for DeviceNet) and an XW2B-20J6-1B Servo Relay Unit.

● Cable Models

Model	Length (L)	Outer diameter of sheath	Weight
XW2Z-050J-A25	50 cm	10.0 dia.	Approx. 0.1 kg
XW2Z-100J-A25	1 m		Approx. 0.2 kg

● Connection Configuration and External Dimensions

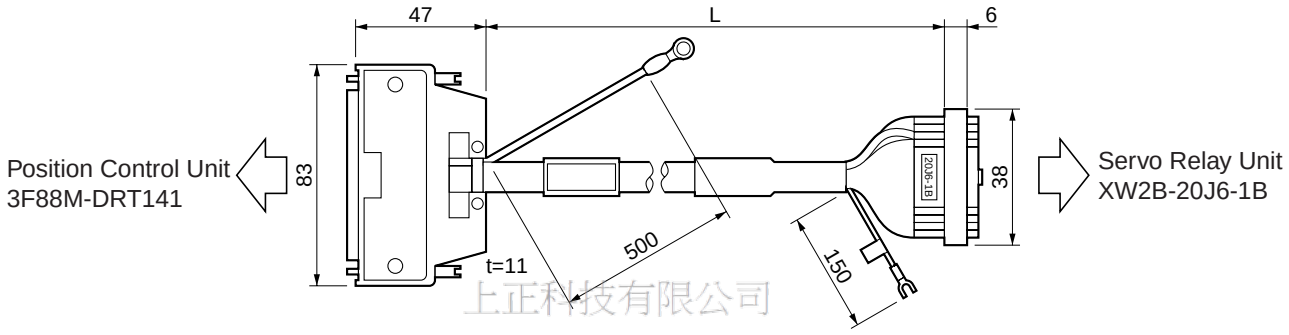

上正科技有限公司
購買、維修 此手冊零組件
電話： 037-466333
Email: service@repairtw.com
Line id: @zzzz
www.repairtw.com

● Wiring

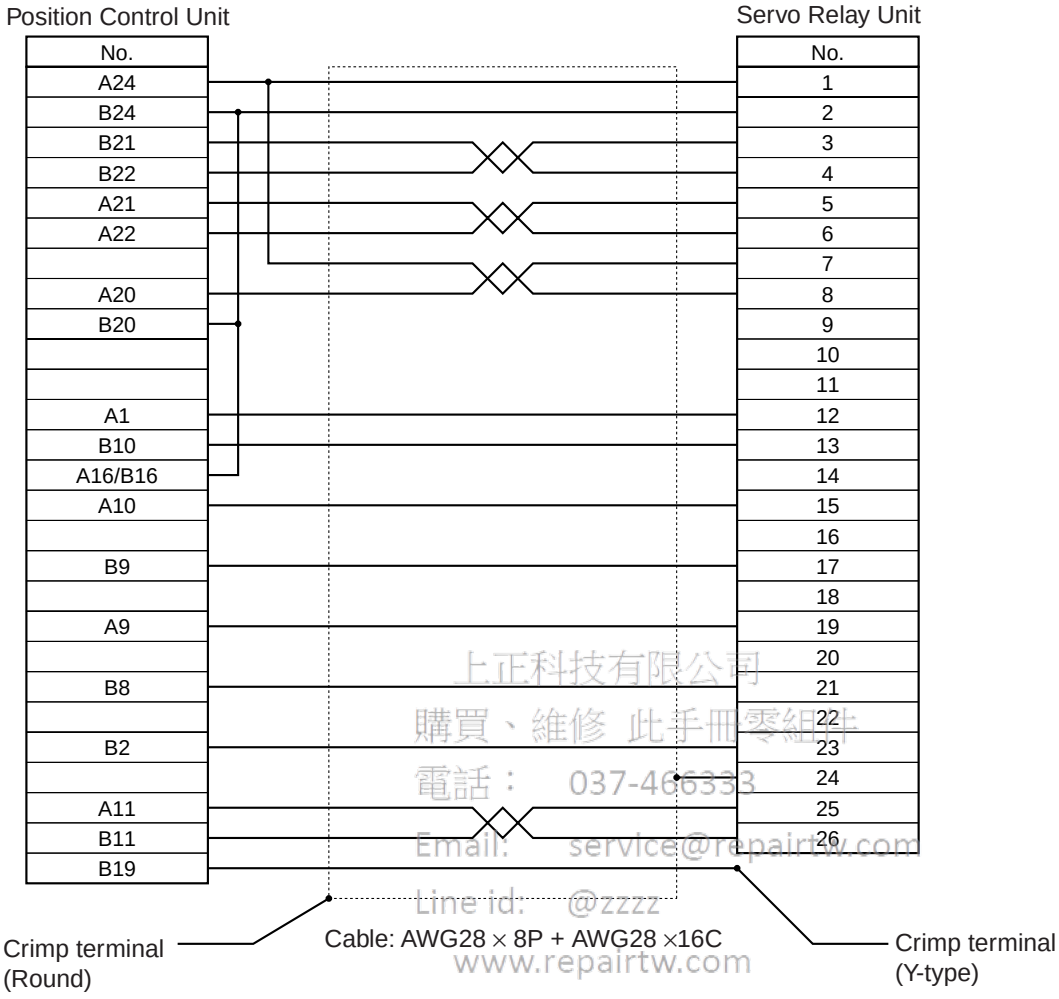

上正科技有限公司
購買、維修 此手冊零組件
電話： 037-466333
Email: service@repairtw.com
Line id: @zzzz
www.repairtw.com

■ CJ1M-CPU Unit Cables (XW2Z-100J-A26)

These CJ1M-CPU Unit Cables connect a CJ1M Unit with built-in pulse I/O (CJ1M-CPU21/-CPU22/-CPU23) and a Servo Relay Unit (XW2B-20J6-8A and XW2B-40J6-9A).

● Cable Models

Model	Length (L)	Outer diameter of sheath	Weight
XW2Z-100J-A26	1 m	10.0 dia.	Approx. 0.1 kg

● Connection Configuration and External Dimensions

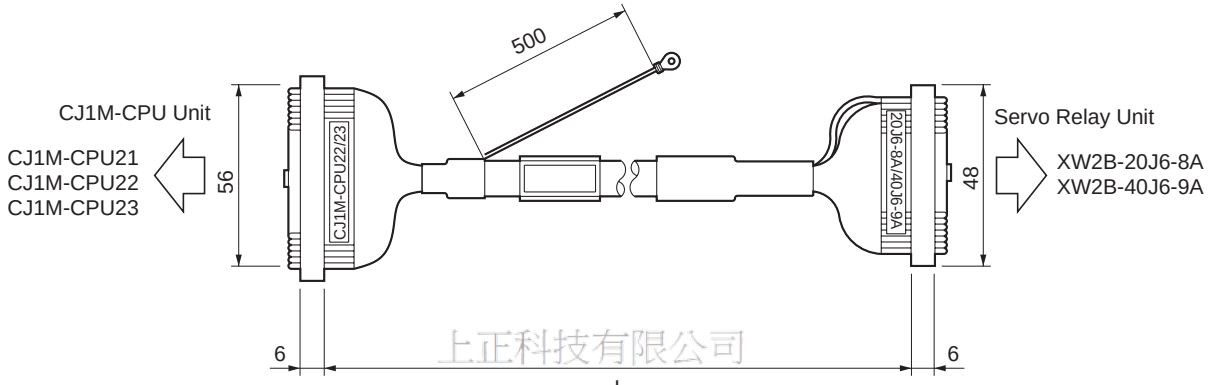

上正科技有限公司
購買、維修 此手冊零組件
電話： 037-466333
Email: service@repairtw.com
Line id: @zzzz
www.repairtw.com

● Wiring

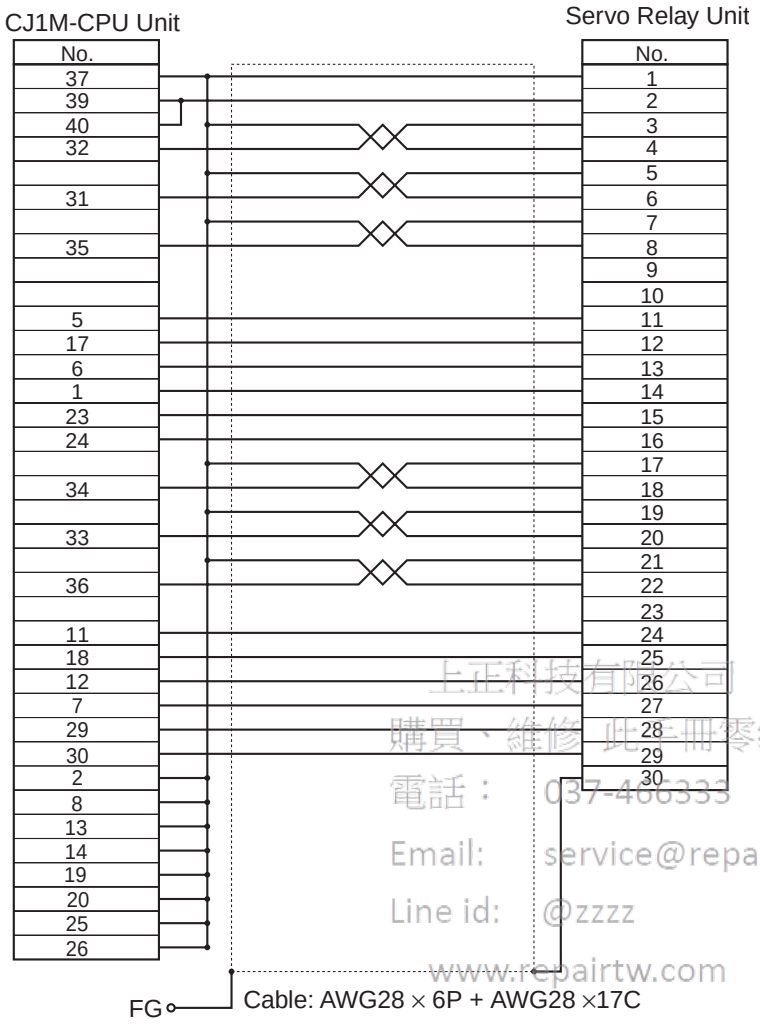

上正科技有限公司
購買、維修 此手冊零組件
電話： 037-466333
Email: service@repairtw.com
Line id: @zzzz
www.repairtw.com

■ Customizable Counter Unit Cables for Special I/O

These Customizable Counter Unit Cables connect a Customizable Counter Unit (CS1W-HCP22-V1) and a Servo Relay Unit (XW2B-80J7-1A).

● Cable Models

Model	Length (L)	Outer diameter of sheath	Weight
XW2Z-050J-A32	50 cm	10.0 dia.	Approx. 0.1 kg
XW2Z-100J-A32	1 m		Approx. 0.2 kg

● Connection Configuration and External Dimensions

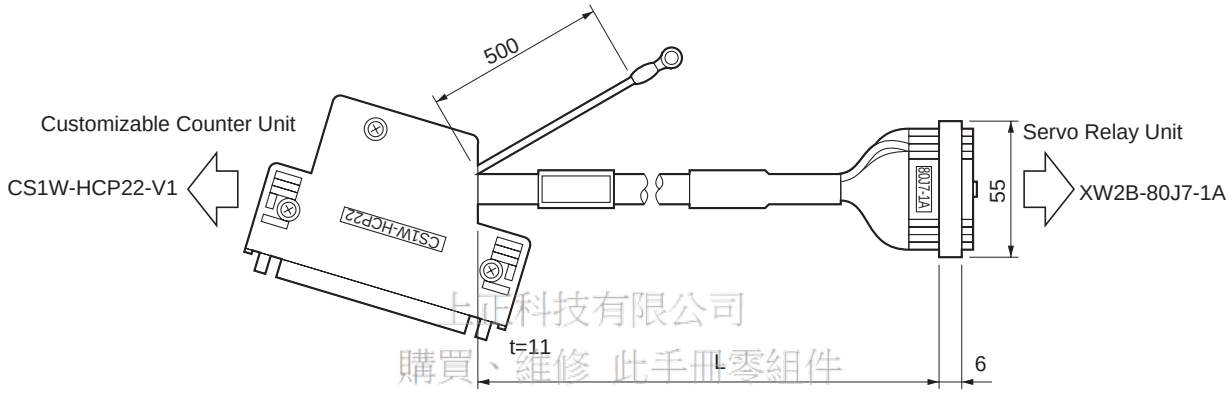

上正科技有限公司
購買、維修 此手冊零組件
電話： 037-466333
Email: service@repairtw.com
Line id: @zzzz
www.repairtw.com

● Wiring

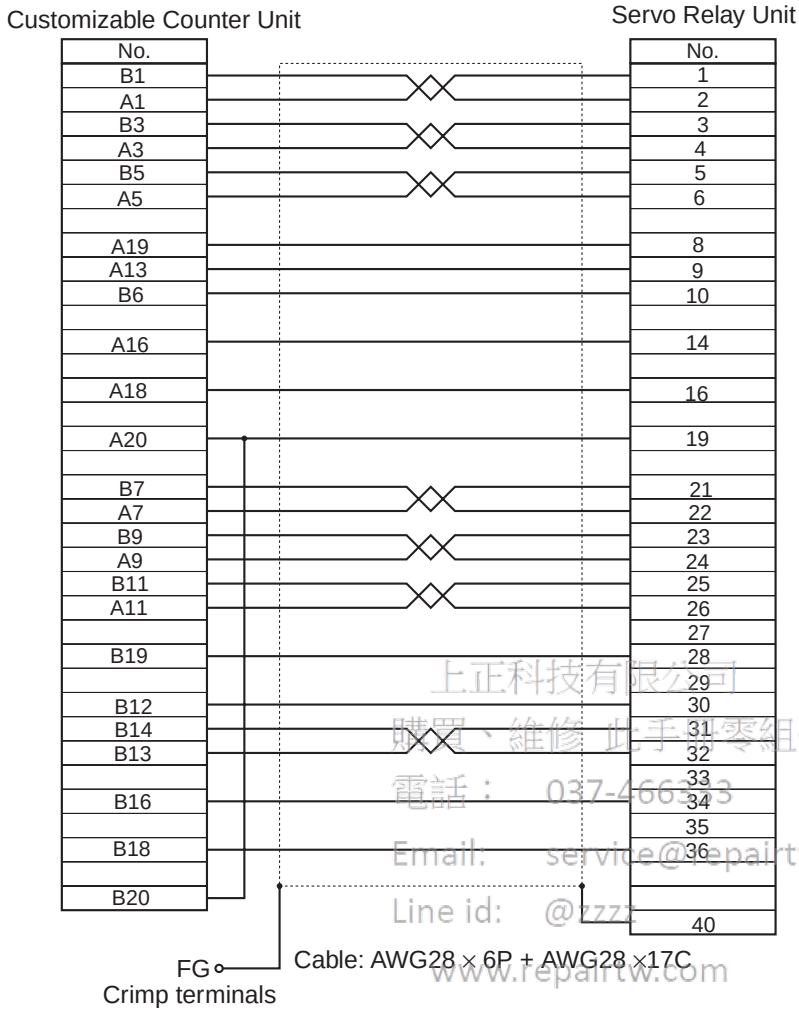

上正科技有限公司
購買、維修 此手冊零組件
電話： 037-466323
Email: service@repairtw.com
Line id: @zzzz
www.repairtw.com

■ Customizable Counter Unit Cables for General-purpose I/O

These Customizable Counter Unit Cables a Customizable Counter Unit (CS1W-HCP22-V1) and the general-purpose I/O of a Servo Relay Unit (XW2B-80J7-1A).

● Cable Models

Model	Length (L)	Outer diameter of sheath	Weight
XW2Z-050J-A29	50 cm	10.0 dia.	Approx. 0.1 kg
XW2Z-100J-A29	1 m		Approx. 0.2 kg

● Connection Configuration and External Dimensions

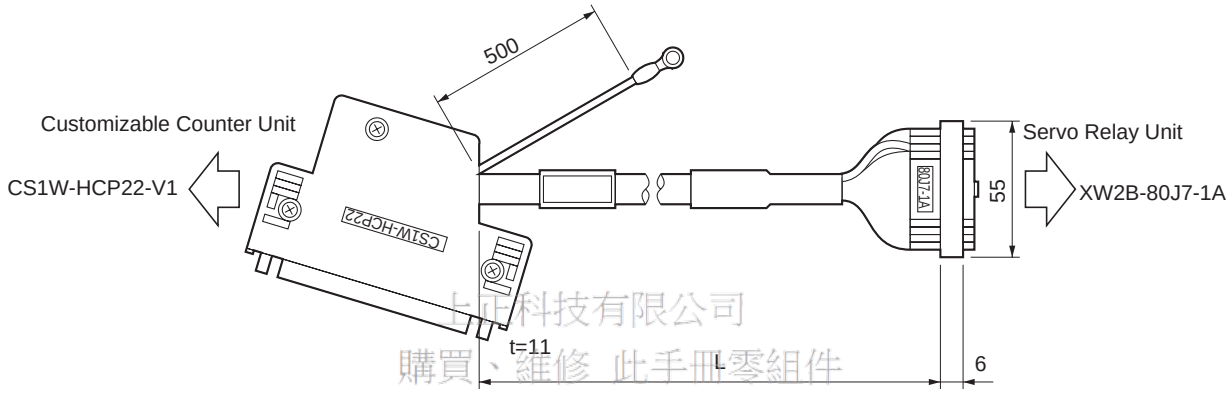

上正科技有限公司
購買、維修 此手冊零組件
電話： 037-466333
Email: service@repairtw.com
Line id: @zzzz
www.repairtw.com

● Wiring

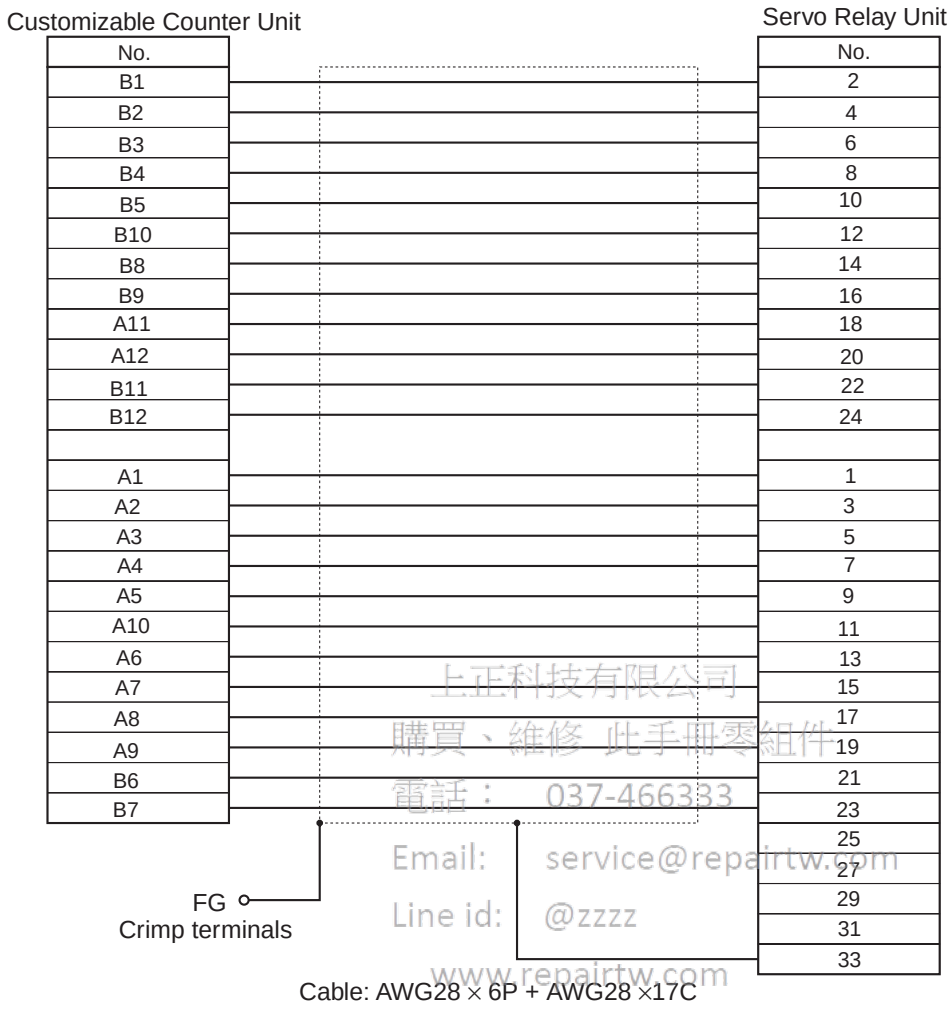

上正科技有限公司
購買、維修 此手冊零組件
電話： 037-466333
Email: service@repairtw.com
Line id: @zzzz
www.repairtw.com

■ Motion Controller Cables for Special I/O

These Motion Controller Cables connect a Motion Control Module (FQM1-MMP21) and the special I/O of a Servo Relay Unit (XW2B-80J7-1A).

● Cable Models

Model	Length (L)	Outer diameter of sheath	Weight
XW2Z-050J-A30	50 cm	10.0 dia.	Approx. 0.1 kg
XW2Z-100J-A30	1 m		Approx. 0.2 kg

● Connection Configuration and External Dimensions

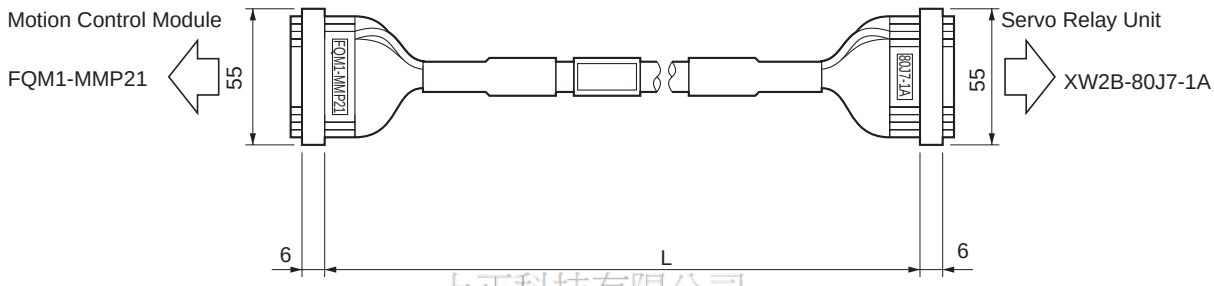

上正科技有限公司
購買、維修 此手冊零組件
電話： 037-466333
Email: service@repairtw.com
Line id: @zzzz
www.repairtw.com

● Wiring

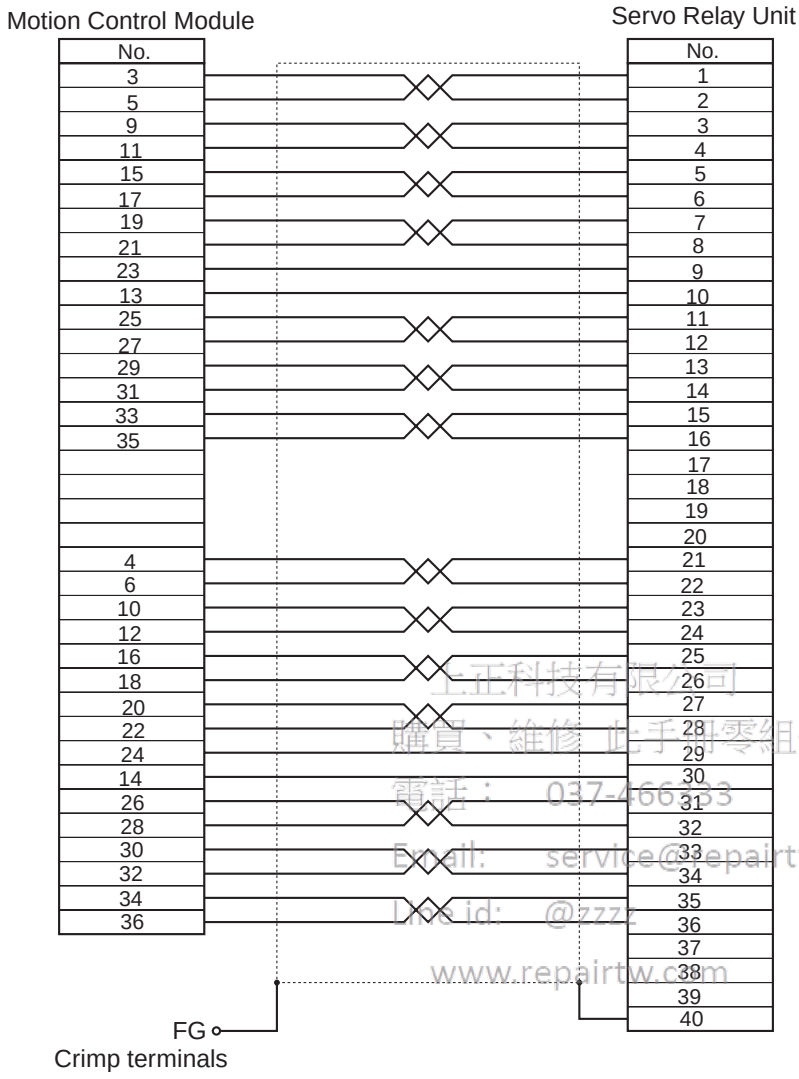

上正科技有限公司
購買、維修 此手冊零組件
電話： 037-466233
Email: service@repairtw.com
Line id: @zzzz
www.repairtw.com

■ Motion Controller Cable for General-purpose I/O

These Motion Controller Cables connect a Motion Control Module (FQM1-MMP21) and the general-purpose I/O of a Servo Relay Unit (XW2B-80J7-1A).

● Cable Models

Model	Length (L)	Outer diameter of sheath	Weight
XW2Z-050J-A28	50 cm	10.0 dia.	Approx. 0.1 kg
XW2Z-100J-A28	1 m		Approx. 0.2 kg

● Connection Configuration and External Dimensions

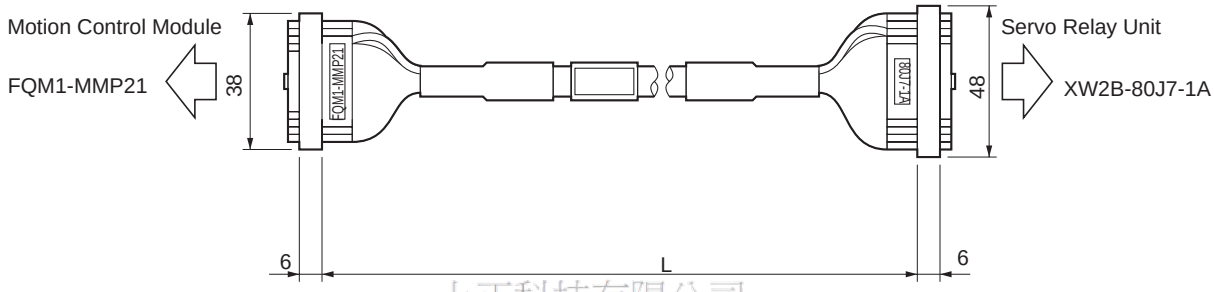

上正科技有限公司
購買、維修 此手冊零組件
電話： 037-466333
Email: service@repairtw.com
Line id: @zzzz
www.repairtw.com

● Wiring

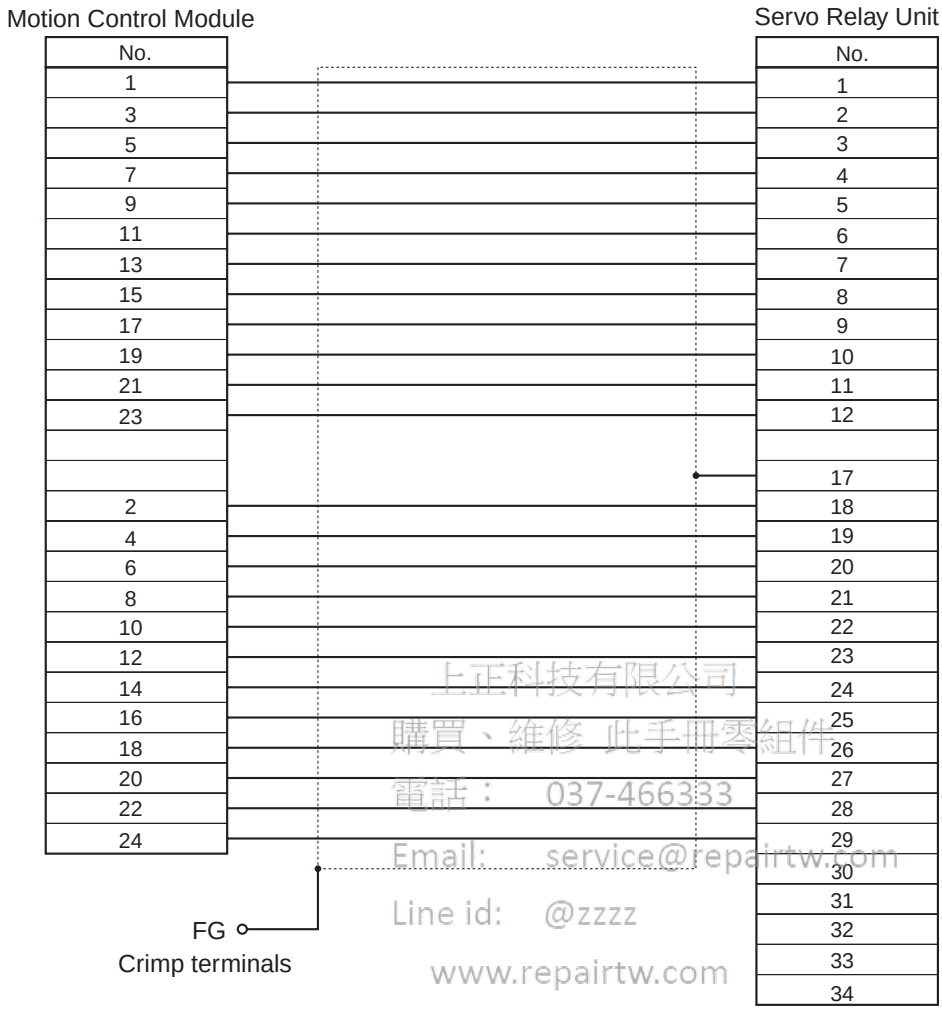

上正科技有限公司
購買、維修 此手冊零組件
電話： 037-466333
Email: service@repairtw.com
Line id: @zzzz
www.repairtw.com

■ Communications Cables (XW2Z-□J-C1)

These Communications Cables connect the communications port of an XW2B-40J6-4A Servo Relay Unit that supports communications and a Programmable Controller Serial Communications Unit or Board.

● Cable Models

Model	Length (L)	Outer diameter of sheath	Weight
XW2Z-100J-C1	1 m	10.0 dia.	Approx. 0.1 kg
XW2Z-200J-C1	2 m		Approx. 0.2 kg

● Connection Configuration and External Dimensions

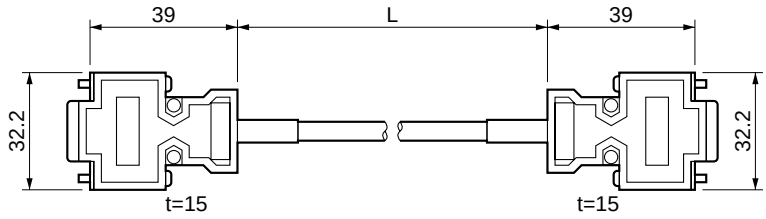

上正科技有限公司
購買、維修 此手冊零組件
電話： 037-466333
Email: service@repairtw.com
Line Id: @zzzz
www.repairtw.com

● Wiring

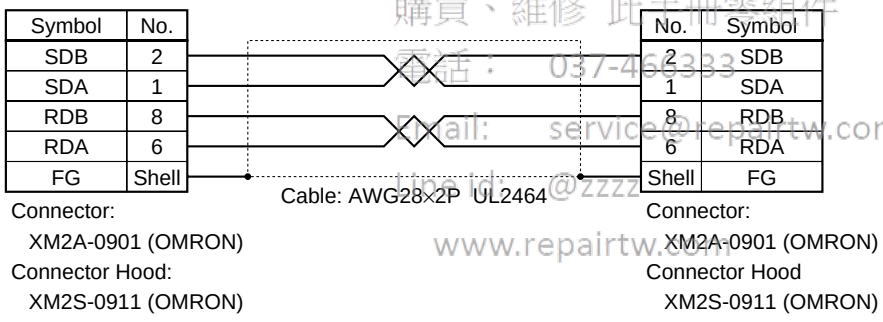

2-8 Parameter Unit Specifications

■ R7A-PR02A Hand-held Parameter Unit

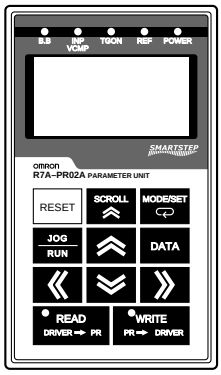

A Parameter Unit is required for setting parameters to operate and control the Servo Driver, for copying Servo Driver parameters, and for other functions. A 1-meter cable is provided with the Parameter Unit.

■ General Specifications

Item	Standards
Operating ambient temperature	0 to 55°C
Storage ambient temperature	–20 to 85°C
Operating ambient humidity	90% max. (with no condensation)
Storage ambient humidity	90% max. (with no condensation)
Storage and operating atmosphere	No corrosive gasses.
Vibration resistance	10 to 55 Hz, 0.1-mm double amplitude or 9.8-m/s^2 max. acceleration, whichever is smallest, in X, Y, and Z directions
Impact resistance	19.6-m/s^2 max. acceleration three times each in X, Y, and Z directions

中茂科技有限公司
網要 維修 此項零組件
電話： 037-466333
Email: service@repairtw.com
Line id: @zzz
www.repairtw.com

■ Performance Specifications

Model	Standards
Type	Hand-held
Cable length	1 m
Connectors	HR212-10P-8P (8 pins) (Hirose Electric)
Display	17-digit × 5-segment LCD display
External dimensions	70 × 120 × 17.8 mm (W × H × D)
Weight	Approx. 0.3 kg
Communications method	Communications using a special protocol (baud rate: 19,200 bits/s)

■ Function Specifications

Model	Standards
Parameter setting	Displaying and changing parameter settings
Monitor display	Displaying all monitor data
Function Mode	Executing functions
Alarm displays	Displaying alarms
Parameter copying	Reading and saving parameters from the Servo Driver to the Parameter Unit; writing parameters from the Parameter Unit to the Servo Driver; and comparing Servo Driver and Parameter Unit parameters.

上正科技有限公司
購買、維修 此手冊零組件
電話： 037-466333
Email: service@repairtw.com
Line id: @zzzz
www.repairtw.com

2-9 External Regeneration Resistor Specifications

If the Servomotor's regenerative energy is excessive, connect an External Regeneration Resistor.

Note 1. External Regeneration Resistors cannot be connected to Servo Drivers of between 30 to 200 W.
Connection to a 400-W Servo Driver is usually not required. If the Servomotor's regenerative energy is excessive, connect an External Regeneration Resistor between B1 and B2.
For a 750-W Servo Driver, B2 and B3 are normally short-circuited. If the Servomotor's regenerative energy is excessive, remove the short bar between B2 and B3 and connect an External Regeneration Resistor between B1 and B2.

Note 2. Refer to *Surge Absorbers* for External Regeneration Resistor selection details.

■ R88A-RR22047S External Regeneration Resistor

■ Specifications

上正科技有限公司
購買、維修、出租伺服組件
電話： 037466333
Email: service@repairtw.com
Line id: @zzzz
www.repairtw.com

Model	Resistance	Nominal capacity	Regeneration absorption for 120°C temperature rise	Heat radiation condition	Thermal switch output specifications
R88A-RR22047S	47 Ω ± 5%	220 W	70 W	t1.0 × □350 (SPCC)	Operating temperature: 170°C±3%, NC contact Rated output: 3 A

■ External Dimensions

All dimensions are in millimeters.

● R88A-RR22047S External Regeneration Resistor

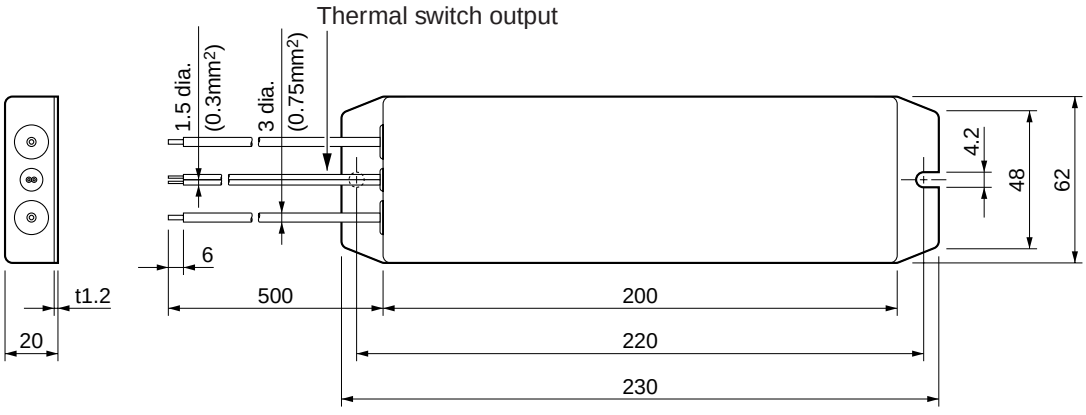

2-10 DC Reactors

Connect a DC Reactor to the Servo Driver's DC Reactor connection terminal as a harmonic current control measure. Select a model to match the Servo Driver being used.

■ R88A-PX□ DC Reactors

■ Specifications

Servo Driver model		DC Reactor			
		Model	Rated current (A)	Inductance (mH)	Weight (kg)
100 V	R7D-APA3L/APA5L/AP01L	R88A-PX5063	1.8	10.0	Approx. 0.6
	R7D-AP02L	R88A-PX5062	3.5	4.7	Approx. 0.9
	R7D-AP04L	R88A-PX5061	4.8	2.0	Approx. 0.5
200 V	R7D-APA3H/APA5H/AP01H	R88A-PX5071	0.85	40.0	Approx. 0.5
	R7D-AP02H	R88A-PX5070	1.65	20.0	Approx. 0.8
	R7D-AP04H	R88A-PX5069	3.3	10.0	Approx. 1.0
	R7D-AP08H	R88A-PX5061	4.8	2.0	Approx. 0.5

上立科技有限公司
購買、維修 此手冊零組件
電話： 037-466333
Email: service@repairtw.com
Line id: @zzzz
www.repairtw.com

■ External Dimensions

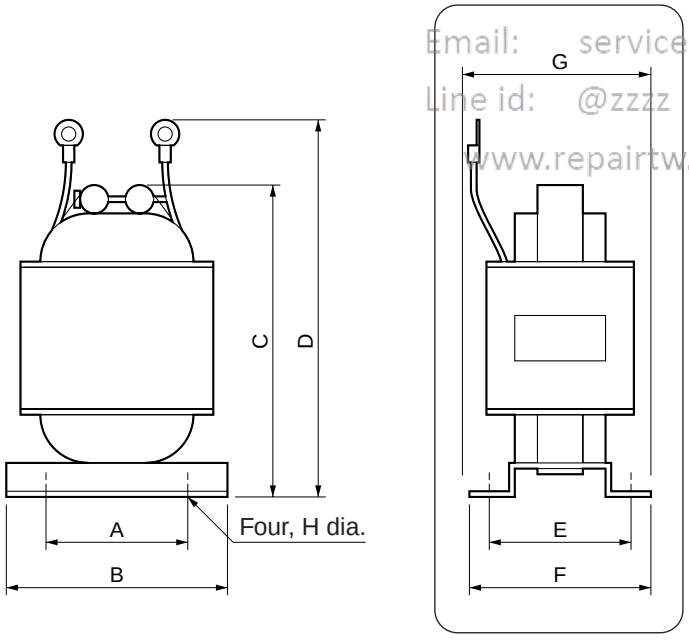

Model	A	B	C	D	E	F	G	H
R88A-PX5061	35	52	80	95	35	45	50	4
R88A-PX5062	40	59	100	120	40	50	55	4
R88A-PX5063	35	52	90	105	35	45	50	4
R88A-PX5069	40	59	105	125	45	60	65	4
R88A-PX5070	40	59	100	120	35	45	50	4
R88A-PX5071	35	52	80	95	30	40	45	4

上正科技有限公司
購買、維修 此手冊零組件
電話： 037-466333
Email: service@repairtw.com
Line id: @477
www.repairtw.com

Chapter 3

System Design and Installation

3-1 Installation Conditions
3-2 Wiring
3-3 Regenerative Energy Absorption

Installation and Wiring Precautions

⚠ **Caution** Do not step on or place a heavy object on the product. Doing so may result in injury.

⚠ **Caution** Do not cover the inlet or outlet ports and prevent any foreign objects from entering the product. Failure to observe this may result in fire.

⚠ **Caution** Be sure to install the product in the correct direction. Not doing so may result in malfunction.

⚠ **Caution** Provide the specified clearances between the Servo Driver and the control box or other devices. Not doing so may result in fire or malfunction.

⚠ **Caution** Do not apply any strong impact. Doing so may result in malfunction.

⚠ **Caution** Be sure to wire correctly and securely. Not doing so may result in motor runaway, injury, or malfunction.

⚠ **Caution** Be sure that all the mounting screws, terminal screws, and cable connector screws are tightened to the torque specified in the relevant manuals. Incorrect tightening torque may result in malfunction.

上正科技有限公司
購買、維修、出售、租賃、
電話： 037-466333
Email: service@repairtw.com
Line id: @zzzz
www.repairtw.com

⚠ **Caution** Use crimp terminals for wiring. Do not connect bare stranded wires directly to terminals. Connection of bare stranded wires may result in burning.

⚠ **Caution** Always use the power supply voltages specified in the this manual. An incorrect voltage may result in malfunctioning or burning.

⚠ **Caution** Take appropriate measures to ensure that the specified power with the rated voltage and frequency is supplied. Be particularly careful in places where the power supply is unstable. An incorrect power supply may result in malfunctioning.

⚠ **Caution** Install external breakers and take other safety measures against short-circuiting in external wiring. Insufficient safety measures against short-circuiting may result in burning.

⚠ **Caution** To avoid damage to the product, take appropriate and sufficient countermeasures when installing systems in the following locations:

- Locations subject to static electricity or other sources of noise.
- Locations subject to strong electromagnetic fields and magnetic fields.
- Locations subject to possible exposure to radiation.
- Locations close to power supply lines.

3-1 Installation Conditions

3-1-1 Servo Drivers

■ Space around Drivers

- Install Servo Drivers according to the dimensions shown in the following illustration to ensure proper heat dispersion and convection inside the panel. Also install a fan for circulation if Servo Drivers are installed side by side to prevent uneven temperatures from developing inside the panel.
- Take the control cable's connector direction into account when installing the Servo Drivers.

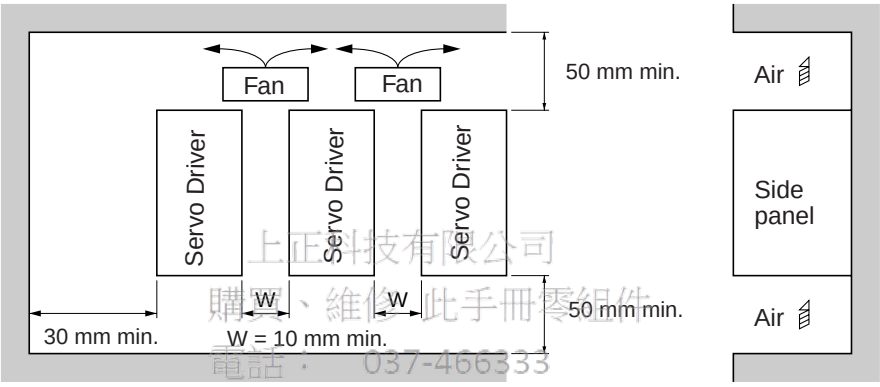

上正科技有限公司
購買、維修此手冊零組件
電話： 037-466333
Email: service@repairtw.com
Line id: @zzzz
www.repairtw.com

■ Mounting Direction

Mount the Servo Drivers in a direction (perpendicular) such that the lettering for the model number, and so on, can be seen.

■ Operating Environment

The environment in which Servo Drivers are operated must meet the following conditions.

- Ambient operating temperature: 0 to 55°C (Take into account temperature rises in the individual Servo Drivers themselves.)
- Ambient operating humidity: 90% max. (with no condensation)
- Atmosphere: No corrosive gases.

■ Ambient Temperature

- Servo Drivers should be operated in environments in which there is minimal temperature rise to maintain a high level of reliability.
- Temperature rise in any Unit installed in a closed space, such as a control box, will cause the Servo Driver's ambient temperature to rise. Use a fan or air conditioner to prevent the Servo Driver's ambient temperature from exceeding 55°C.
- Servo Driver surface temperatures may rise to as much as 30°C above the ambient temperature. Use heat-resistant materials for wiring, and keep separate any devices or wiring that are sensitive to heat.

- The service life of a Servo Driver is largely determined by the temperature around the internal electrolytic capacitors. The service life of an electrolytic capacitor is affected by a drop in electrolytic volume and an increase in internal resistance, which can result in overvoltage alarms, malfunctioning due to noise, and damage to individual elements. If a Servo Driver is always operated at the maximum ambient temperature of 40°C and at 80% of the rated torque, then a service life of approximately 50,000 hours can be expected. A drop of 10°C in the ambient temperature will double the expected service life.

■ Keeping Foreign Objects Out of Units

- Place a cover over the Units or take other preventative measures to prevent foreign objects, such as drill filings, from getting into the Units during installation. Be sure to remove the cover after installation is complete. If the cover is left on during operation, heat buildup may damage the Units.
- Take measures during installation and operation to prevent foreign objects such as metal particles, oil, machining oil, dust, or water from getting inside of Servo Drivers.

3-1-2 Servomotors

■ Operating Environment

上正科技有限公司
購買、維修、技術服務組件
電話： 037-466333
Email: service@repairtw.com
Line id: @zzzz
www.repairtw.com

The environment in which the Servomotor is operated must meet the following conditions. Operating the Servomotor outside of the following ranges may result in malfunction of the Servomotor.

- Ambient operating temperature: 0 to +40°C
- Ambient operating humidity: 20% to 80% (with no condensation)
- Atmosphere: No corrosive gases.

■ Impact and Load

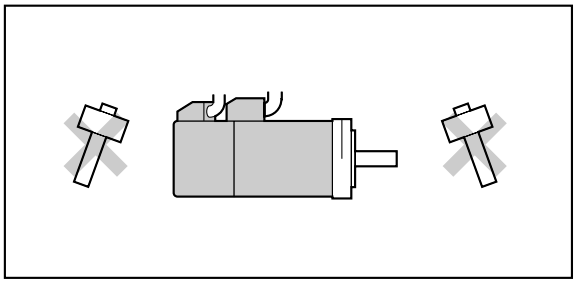

- The Servomotor is resistant to impacts of up to 98 m/s^2. Do not subject it to heavy impacts or loads during transport, installation, or removal. When transporting it, hold onto the Servomotor itself, and do not hold onto the encoder, cable, or connector areas. Holding onto weaker areas such as these can damage the Servomotor.
- Always use a pulley remover to remove pulleys, couplings, or other objects from the shaft.
- Secure cables so that there is no impact or load placed on the cable connector areas.

■ Connecting to Mechanical Systems

- The axial loads for Servomotors are specified in *2-4-2 Performance Specifications*. If an axial load greater than that specified is applied to a Servomotor, it will reduce the service life of the motor bearings and may damage the motor shaft.
- When connecting to a load, use couplings that can sufficiently absorb mechanical eccentricity and variation.

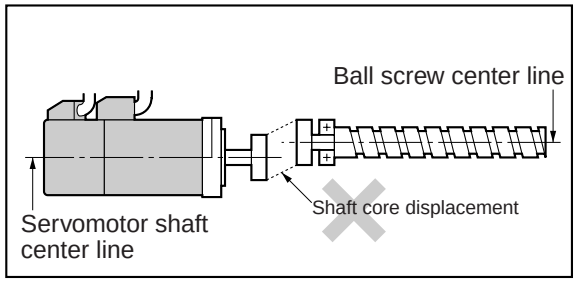

- For spur gears, an extremely large radial load may be applied depending on the gear precision. Use spur gears with a high degree of accuracy (for example, JIS class 2: normal line pitch error of 6 μm max. for a pitch circle diameter of 50 mm). If the gear precision is not adequate, allow backlash to ensure that no radial load is placed on the motor shaft.

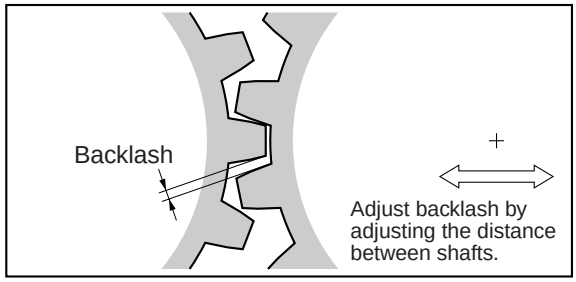

- Bevel gears will cause a load to be applied in the thrust direction depending on the structural precision, the gear precision, and temperature changes. Provide appropriate backlash or take other measures to ensure that no thrust load is applied which exceeds specifications.

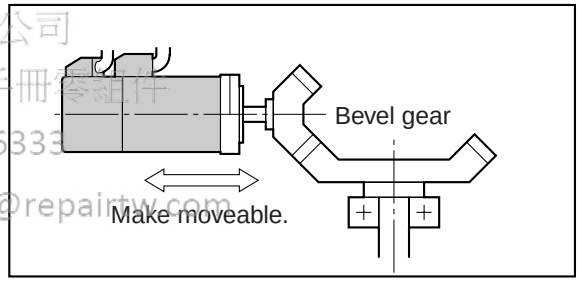

上正科技有限公司
購買、維修 工業手冊零組件
電話： 037-466333
Email: service@repairtw.com
Line Id: @2222
www.repairtw.com

- Do not put rubber packing on the flange surface. If the flange is mounted with rubber packing, the motor flange may separate due to the tightening strength.
- When connecting to a V-belt or timing belt, consult the maker for belt selection and tension. A radial load twice the belt tension will be placed on the motor shaft. Do not allow a radial load exceeding specifications to be placed on the motor shaft due to belt tension. If an excessive radial load is applied, the motor shaft may be damaged. Set up the structure so that the radial load can be adjusted. A large radial load may also be applied as a result of belt vibration. Attach a brace and adjust Servo Driver gain so that belt vibration is minimized.

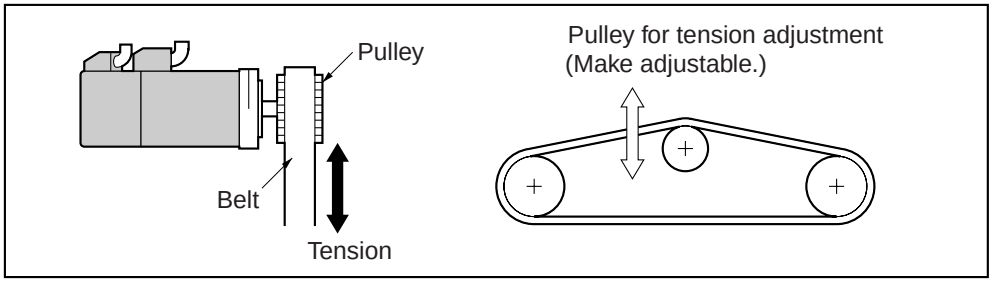

■ Water and Drip Resistance

The enclosure ratings for the Servomotors are as follows:

3,000-r/min Cylinder-style Servomotors (30 to 750 W): IP55 (except for through-shaft parts)

3,000-r/min Flat-style Servomotors (100 W to 750 kW): IP55 (except for through-shaft parts)

■ Other Precautions

- Do not apply commercial power directly to the Servomotor. The Servomotors run on synchronous AC and use permanent magnets. Applying commercial power directly will burn out the motor coils.
- Take measures to prevent the shaft from rusting. The shafts are coated with anti-rust oil when shipped, but anti-rust oil or grease should also be applied when connecting the shaft to a load.
- Absolutely do not remove the encoder cover or take the motor apart. The magnet and the encoder are aligned in the AC Servomotor. If they become misaligned, the motor will not operate.

3-1-3 Reduction Gears

■ Installation

- Use only the specified combinations of Servomotors and reduction gears. Using a combination that is not specified, or using in combination with another company's reductions gears or Servomotor may result in a reduction in the service life of the motor bearings.
- The dimensions of the Servomotor mounting flange on the reduction gears differ for each Servomotor. Do not install reduction gears on a Servomotor other than the one specified.
- Use a Servomotor with a straight shaft and without a key when installing reduction gears.
- Install reduction gears on the Servomotor using the following procedure.

上正科技有限公司
購買、維修 此手冊零組件
電話： 037-486333
Email: service@repairtw.com
Line id: @zzzz
www.repairtw.com

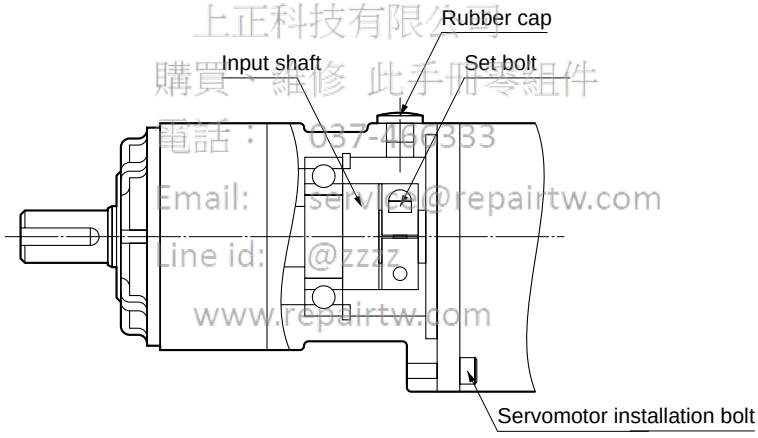

1. Remove the rubber cap and check that the set bolt is loose.
2. Insert the Servomotor shaft into the input shaft.
3. Tighten the Servomotor installation bolt according to the tightening torque specified in the following table.

Servomotor installation bolt	Tightening torque (N·m)
M4	2.9
M5	5.8
M6	9.8
M8	19.6
M10	39.2

4. Tighten the set bolt according to the tightening torque specified in the following table.

Set bolt	Tightening torque (N·m)
M3	1.0 to 1.5
M4	2.9 to 3.5

5. After tightening the set bolt, replace the rubber cap.

■ Using Reduction Gears from Other Companies (Reference Information)

If the system configuration requires that a SMARTSTEP A-series Motor be used in combination with a reduction gear from another company, select the reduction gear so that the loads on the motor shaft (i.e., both the radial and thrust loads) are with the allowable values. (Refer to *2-4-2 Performance Specifications* for details on the allowable loads for motors.) Also, control the motor speed and output torque so that the allowable input speed and allowable input torque of the reduction gear is not exceeded.

上正科技有限公司
購買、維修 此手冊零組件
電話： 037-466333
Email: service@repairtw.com
Line id: @zzzz
www.repairtw.com

3-2 Wiring

3-2-1 Connecting Cable

This section shows the types of connecting cable used in a SMARTSTEP A-series system. The wide selection of cables provided for configuring a servo system using a Position Control Unit makes wiring simple.

System Configuration

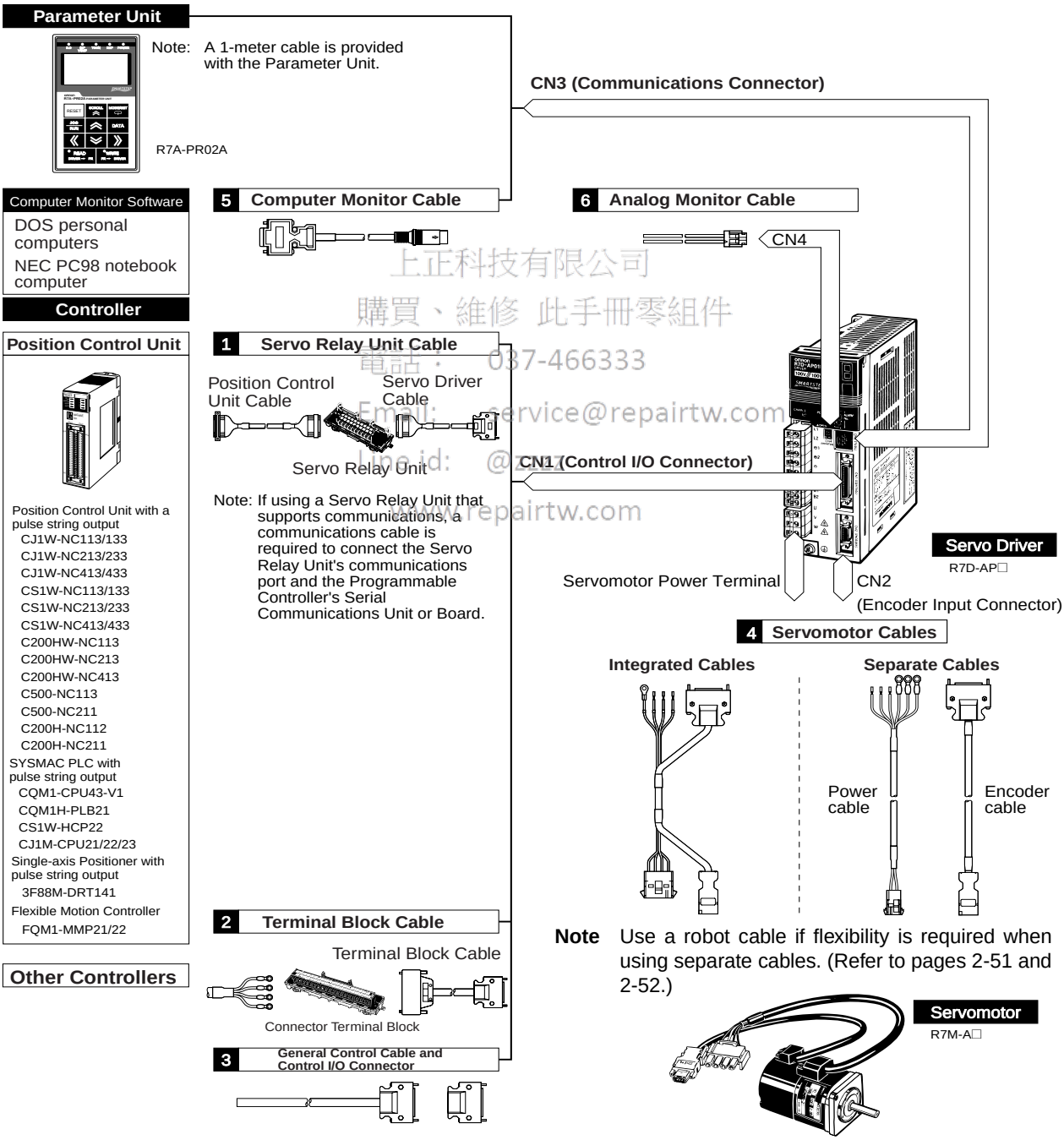

上正科技有限公司
購買、維修 此手冊零組件
電話： 037-466333
Email: service@repairtw.com
Line id: @zzzz
www.repairtw.com

■ Selecting Connecting Cables

1. Servo Relay Unit Cables

Select a Servo Relay Unit and Cable to match the Position Control Unit that is to be used.

● Selecting Connecting Cables without Communications Support

Position Control Unit	Position Control Unit Cable	Servo Relay Unit	Servo Driver Cable
CQM1-CPU43-V1	XW2Z-□□□J-A3	XW2B-20J6-3B	XW2Z-□□□J-B5
CQM1H-PLB21			
C200H-NC112	XW2Z-□□□J-A4	XW2B-20J6-1B	
C200H-NC211	XW2Z-□□□J-A5	XW2B-40J6-2B	
C500-NC113			
C500-NC211			
CS1W-NC113	XW2Z-□□□J-A8	XW2B-20J6-1B	
C200HW-NC113			
CS1W-NC213	XW2Z-□□□J-A9	XW2B-40J6-2B	
CS1W-NC413			
C200HW-NC213			
C200HW-NC413			
CS1W-NC133	XW2Z-□□□J-A12	XW2B-20J6-1B	
CS1W-NC233	XW2Z-□□□J-A13	XW2B-40J6-2B	
CS1W-NC433			
CJ1W-NC113	XW2Z-□□□J-A16	XW2B-20J6-1B	
CJ1W-NC213	XW2Z-□□□J-A17	XW2B-40J6-2B	
CJ1W-NC413			
CJ1W-NC133	XW2Z-□□□J-A20	XW2B-20J6-1B	
CJ1W-NC233	XW2Z-□□□J-A21	XW2B-40J6-2B	
CJ1W-NC433			
CS1W-HCP22	XW2Z-□□□J-A22 (single-axis)	XW2B-20J6-3B	
	XW2Z-□□□J-A23 (two-axis)		
3F88M-DRT141	XW2Z-□□□J-A25	XW2B-20J6-1B	
CJ1M-CPU21	XW2Z-□□□J-A26	XW2B-20J6-8A (1 axis) XW2B-40J6-9A (2 axes)	
CJ1M-CPU22			
CJ1M-CPU23			

上正科技有限公司
購買、維修 此手機零組件
電話： 037-466333
Email: service@repairtw.com
Line Id: @zzzz
www.repairtw.com

Note 1. The empty boxes in the model numbers are for cable length. The Position Control Unit Cable length can be 0.5 or 1 meter long. (For example, XW2Z-050J-A3 is 0.5 meters long.) The Servo Driver cable length can be 1 or 2 meters long. (For example, XW2Z-100J-B5 is 1 meter long.)

Note 2. When 2-axis control is used with one Position Control Unit, two cables are required to the Servo Driver.

● Selecting Connecting Cables with Communications Support

Position Control Unit	Position Control Unit Cable	Servo Relay Unit	Servo Driver Cable
CS1W-NC213	XW2Z-□□□J-A9	XW2B-40J6-4A	XW2Z-□□□J-B7
CS1W-NC413			
CS1W-NC233	XW2Z-□□□J-A13		
CS1W-NC433			
CJ1W-NC213	XW2Z-□□□J-A17		
CJ1W-NC413			
CJ1W-NC233	XW2Z-□□□J-A21		
CJ1W-NC433			
C200HW-NC213	XW2Z-□□□J-A9		
C200HW-NC413			
CS1W-HCP22-V1	XW2Z-□□□J-A32	XW2B-80J7-1A	XW2Z-□□□J-B12
	XW2Z-□□□J-A29		
FQM1-MMP21	XW2Z-□□□J-A30		XW2Z-□□□J-B10
	XW2Z-□□□J-A28		

Note 1. The empty boxes in the model numbers are for cable length. The Position Control Unit cable length can be 0.5 or 1 meter long. (For example, XW2Z-050J-A9 is 0.5 meters long.) The Servo Driver cable length can be 1 or 2 meters long. (For example, XW2Z-100J-B7 is 1 meter long.)

Note 2. When 2-axis control is used with one Position Control Unit, two cables are required to the Servo Driver.

Note 3. When using the communications, an XW2Z-□□□J-C1 communications cable is required to connect the Servo Relay Unit's communications port and the Programmable Controller Serial Communications Unit or Board. The communications cable length can be 1 or 2 meters long. (For example, XW2Z-100J-C1 is 1 meter long.)

上正科技有限公司
購買、維修 此手冊零組件
電話： 037-466333
Email: service@repairtw.com
Line Id: @2222
www.repairtw.com

2. Connector-Terminal Block and Cables

These cables are used for connecting to Controllers for which no special cable is provided. The cables and terminal block convert the Servo Driver's Control I/O Connector (CN1) signals to terminal block connections.

Connector Terminal Block	Cable	Remarks
XW2B-40F5-P	R88A-CTU□□□N	The empty boxes in the model numbers are for cable length. The cables can be 1 or 2 meters long. (For example, R88A-CTU002N is 2 meters long.)

3. General Control Cables and Control I/O Connector

These cables and connector are used for connecting to Controllers for which no special cable is provided, and when the cable for the Servo Driver's control I/O connector is prepared by the user.

Name	Cable	Remarks
General Control Cable	R88A-CPU□□□S	The cable is attached to a connector that connects to the Control I/O Connector (CN1). The empty boxes in the model numbers are for cable length. The cables can be 1 or 2 meters long. (For example, R88A-CPU001S is 1 meter long.)
Control I/O Connector	R88A-CNU01C	This is the connector for connecting to the Control I/O Connector (CN1). (This item is a connector only.)

4. Servomotor Cables

Servomotor Cables come in two types: Cables for Servomotors without brakes and Cables for Servomotors with brakes. Select the Cable to match the Servomotor being used. Integrated Cables combine an encoder cable and power cable, or separate Power Cables and Encoder Cables are available.

One Power Cable and one Encoder Cable are required if separate cables are used.

Separate cables are also available with robot cables. Use a robot cable if cable flexibility is required.

上正科技有限公司
購買、維修 此手冊零組件
電話： 037-466333
Email: service@repairtw.com
Line id: @zzzz
www.repairtw.com

● Integrated Cables

Specifications	Cable model number	Remarks
Cable for Servomotors without brakes (both Cylinder-style and Flat-style)	R7A-CEA□□□S	Insert the cable length in the □□□ of the model number. There are five cable lengths: 3 m, 5 m, 10 m, 15 m, and 20 m. (Model number example: R7A-CEA003S for a 3-m cable)
Cable for Servomotors with brakes (both Cylinder-style and Flat-style)	R7A-CEA□□□B	

● Separate Cables

Power Cables

Specifications	Cable model number	Remarks
Cable for Servomotors without brakes (both Cylinder-style and Flat-style)	R88A-CAWA□□□S	Insert the cable length in the □□□ of the model number. There are five cable lengths: 3 m, 5 m, 10 m, 15 m, and 20 m. (Model number example: R88A-CAWA003S for a 3-m cable)
Cable for Servomotors with brakes (both Cylinder-style and Flat-style)	R88A-CAWA□□□B	
Robot Cable for Servomotors without brakes (both Cylinder-style and Flat-style)	R88A-CAWA□□□SR	Insert the cable length in the □□□ of the model number. There are five cable lengths: 3 m, 5 m, 10 m, 15 m, and 20 m. (Model number example: R88A-CAWA003SR for a 3-m cable) Use a Robot Cable if cable flexibility is required.
Robot Cable for Servomotors with brakes (both Cylinder-style and Flat-style)	R88A-CAWA□□□BR	

Encoder Cables

Specifications	Cable model number	Remarks
Cable for Servomotors with or without brakes (both Cylinder-style and Flat-style)	R7A-CRA□□□C	Insert the cable length in the □□□□ of the model number. There are five cable lengths: 3 m, 5 m, 10 m, 15 m, and 20 m. (Model number example: R7A-CRA003C for a 3-m cable)
Robot Cable for Servomotors with or without brakes (both Cylinder-style and Flat-style)	R7A-CRA□□□CR	Insert the cable length in the □□□□ of the model number. There are four cable lengths: 3 m, 5 m, 15 m, and 20 m. (Model number example: R7A-CRA003CR for a 3-m cable) Use a Robot Cable if cable flexibility is required.

5. Computer Monitor Cable

A Computer Monitor Cable and the Computer Monitor Software for Servo Drivers (run on Windows) are required to make Servo Driver parameter settings and perform monitoring from a personal computer.

Name/specifications			Model	Remarks
Computer Monitor Cable	For DOS personal computers	2 m	R7A-CCA002P2	Only 2-meter cables are available.
	NEC PC98 notebook computer	2 m	R7A-CCA002P3	Only 2-meter cables are available.

上正科技有限公司
購買、維修 此手冊零組件
電話： 037-466333
Email: service@repairtw.com
Line id: @zzzz
www.repairtw.com

6. Analog Monitor Cable

This is the cable for connecting to the Servo Driver's analog monitor connector (CN4). It is required for connecting analog monitor outputs to an external device (such as a measuring instrument).

Name/specifications		Model	Remarks
Analog Monitor Cable	1 m	R88A-CMW001S	Only 1-meter cables are available.

3-2-2 Peripheral Device Connection Examples

■ **Single-phase Input:**
R7D-APA3L; R7D-APA5L; R7D-AP01L; R7D-AP02L; R7D-AP04L; R7D-APA3H; R7D-APA5H; R7D-AP01H; R7D-AP02H; R7D-AP04H; and R7D-AP08H

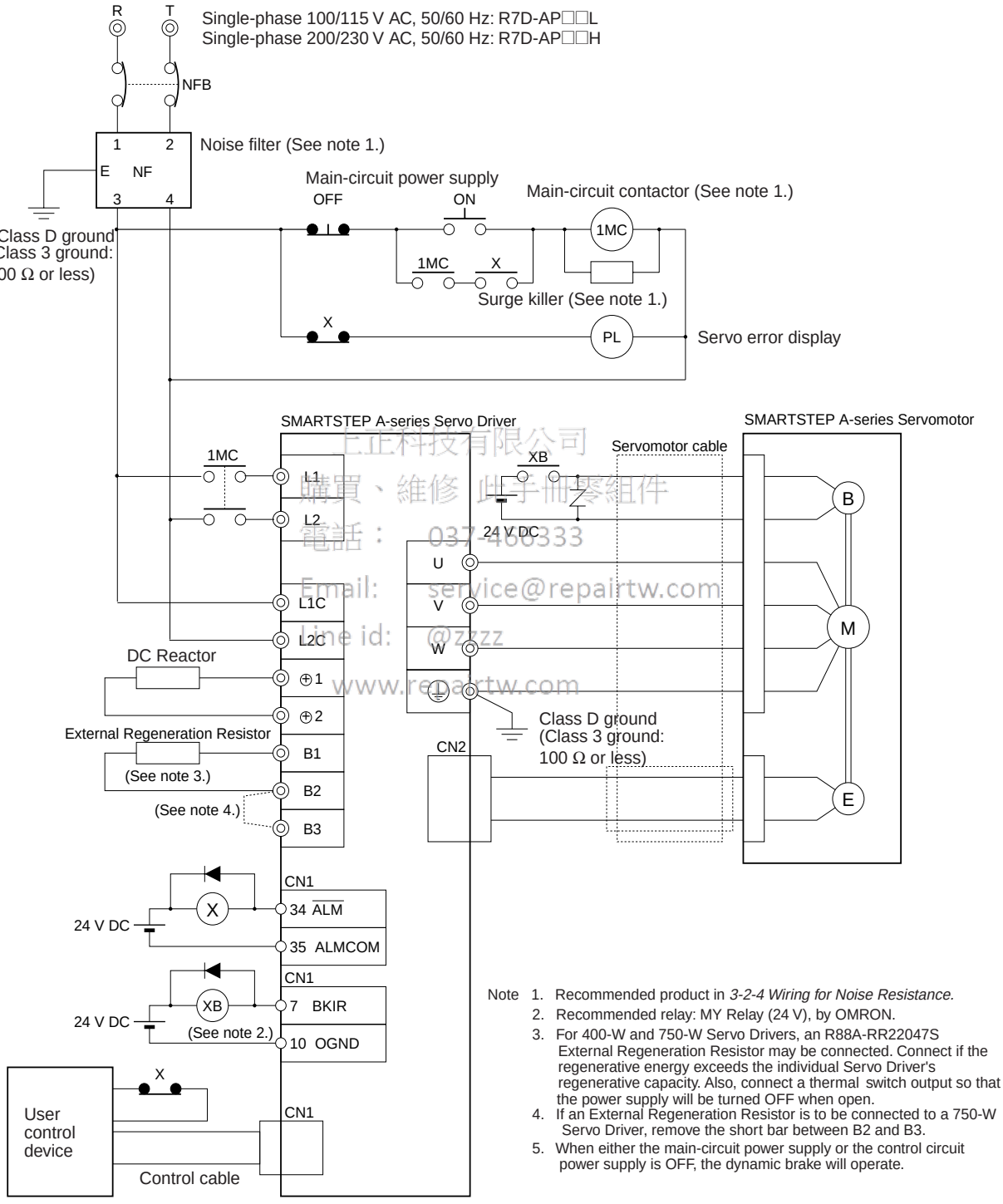

上正科技有限公司
購買、維修 此手冊零組件
電話： 037-466333
Email: service@repairtw.com
Line id: @zzzz
www.repairtw.com

Note
1. Recommended product in *3-2-4 Wiring for Noise Resistance.*
2. Recommended relay: MY Relay (24 V), by OMRON.
3. For 400-W and 750-W Servo Drivers, an R88A-RR22047S External Regeneration Resistor may be connected. Connect if the regenerative energy exceeds the individual Servo Driver's regenerative capacity. Also, connect a thermal switch output so that the power supply will be turned OFF when open.
4. If an External Regeneration Resistor is to be connected to a 750-W Servo Driver, remove the short bar between B2 and B3.
5. When either the main-circuit power supply or the control circuit power supply is OFF, the dynamic brake will operate.

■ Three-phase Input: R7D-AP08H

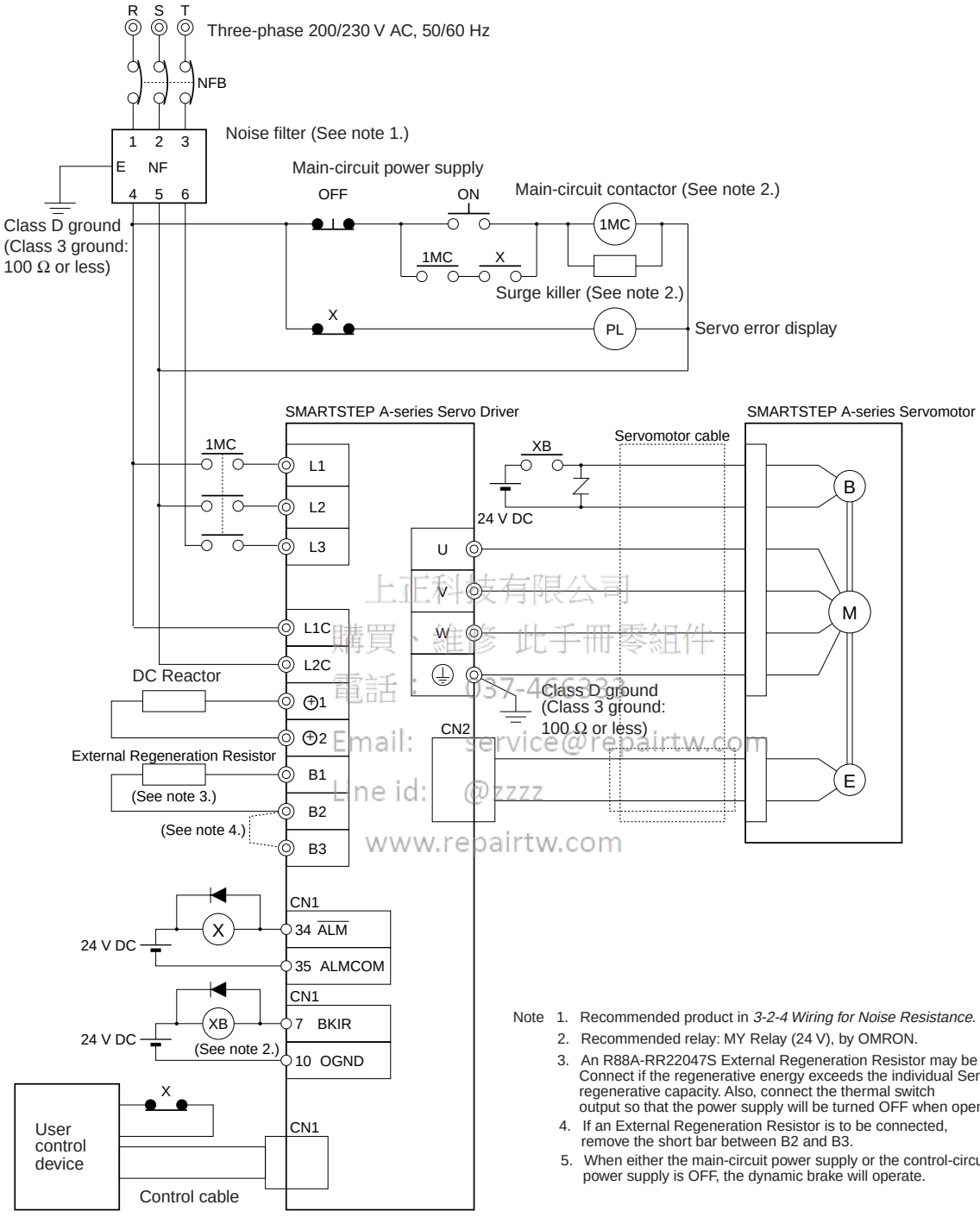

上正科技有限公司
購買、維修 此手冊零組件
電話： 037-466333
Email: service@repairtw.com
Line id: @zzzz
www.repairtw.com

Note 1. Recommended product in *3-2-4 Wiring for Noise Resistance*.
2. Recommended relay: MY Relay (24 V), by OMRON.
3. An R88A-RR22047S External Regeneration Resistor may be connected. Connect if the regenerative energy exceeds the individual Servo Driver's regenerative capacity. Also, connect the thermal switch output so that the power supply will be turned OFF when open.
4. If an External Regeneration Resistor is to be connected, remove the short bar between B2 and B3.
5. When either the main-circuit power supply or the control-circuit power supply is OFF, the dynamic brake will operate.

3-2-3 Terminal Block Wiring

When wiring a Terminal Block, pay attention to wire sizes, grounding systems, and anti-noise measures.

■ Terminal Block Names and Functions

Terminal label	Name	Function	
L1 L2 L3	Main circuit power supply input	R7D-AP□H: Single-phase 200/230 V AC (170 to 253 V), 50/60 Hz R7D-AP□L: Single-phase 100/115 V AC (85 to 127 V), 50/60 Hz Note Only the R7D–AP08H (750 W) has an L3 terminal, enabling three-phase input: Three-phase 200/230 V AC (170 to 253 V AC) 50/60 Hz	
⊕1 ⊕2	Connection terminals for DC Reactor for power supply harmonic control	Normally short between +1 and +2. When harmonic control is required, connect a DC Reactor between +1 and +2.	
⊖	Main circuit DC output (negative)	Do not connect anything to this terminal.	
L1C L2C	Control circuit power supply input	R7D-AP□H: Single-phase 200/230 V AC (170 to 253 V), 50/60 Hz R7D-AP□L: Single-phase 100/115 V AC (85 to 127 V), 50/60 Hz	
B1 B2 B3	External regeneration resistance connection terminals	30 to 200 W: An External Regeneration Resistor cannot be connected to these terminals. 400 W: These terminals normally do not need to be connected. If there is high regenerative energy, connect an External Regeneration Resistor between B1 and B2. 750 W: Normally shorted between B2 and B3. If there is high regenerative energy, remove the short bar between B2 and B3 and connect an External Regeneration Resistor between B1 and B2.	
U	Servomotor connection terminals	Red	These are the output terminals to the Servomotor. Be careful to wire them correctly.
V		White	
W		Blue	
⏚		Green/ Yellow	
⏚	Frame ground	This is the ground terminal. Ground to a minimum of Class D ground (Class 3 ground: 100 Ω or less).	

上正科技有限公司
購買、維修 此手冊零組件
電話： 03-4663658
Email: service@repair.tw
Line Id: @zzzz
www.repair.tw.com

■ Terminal Block Wire Sizes

● 100-V AC Input (R7D-AP□L)

Item	Model Unit		R7D-APA3L	R7D-APA5L	R7D-AP01L	R7D-AP02L	R7D-AP04L
Power supply capacity		kVA	0.2	0.25	0.4	0.75	1.2
Main circuit power supply input (L1, L2) (See note 1.)	Effective current	A (rms)	1.64	2.2	4.0	6.8	11
	Wire size	mm^2	1.25	1.25	1.25	2	2
Control circuit power supply input (L1C, L2C)	Effective current	A (rms)	0.13	0.13	0.13	0.13	0.13
	Wire size	mm^2	1.25	1.25	1.25	1.25	1.25
Servomotor connection terminal (U, V, W, ⏚) (See note 2.)	Effective current	A (rms)	0.42	0.6	0.89	2.0	2.6
	Wire size	mm^2	1.25	1.25	1.25	1.25	1.25
Frame ground (⏚)	Wire size	mm^2	2	2	2	2	2
	Screw size	–	M4	M4	M4	M4	M4
	Torque	N·m	1.2	1.2	1.2	1.2	1.2
No-fuse breaker or fuse capacity		A (rms)	8	8	8	10	13

上正科技有限公司
購買、維修 此手冊零組件
電話: 037-406333
Email: service@repairtw.com
Line id: @zzz
www.repairtw.com

Note 1. Use the same wire sizes for ⊕1, ⊕2, B1, and B2.

Note 2. Connect an OMRON Servomotor Cable to the Servomotor connection terminals.

● 200V AC Input (R7D-AP□H)

Item	Model / Unit		R7D-APA3H	R7D-APA5H	R7D-AP01H	R7D-AP02H	R7D-AP04H	R7D-AP08H
Power supply capacity		kVA	0.2	0.25	0.4	0.75	1.2	2.1
Main circuit power supply input (L1, L2) (See note 1.)	Effective current	A (rms)	0.82	1.1	2.0	3.4	5.5	9.4
	Wire size	mm^2	1.25	1.25	1.25	1.25	2	2
Control circuit power supply input (L1C, L2C)	Effective current	A (rms)	0.1	0.1	0.1	0.1	0.1	0.1
	Wire size	mm^2	1.25	1.25	1.25	1.25	1.25	1.25
Servomotor connection terminal (U, V, W, ⏚) (See note 2.)	Effective current	A (rms)	0.42	0.6	0.89	2.0	2.6	4.4
	Wire size	mm^2	1.25	1.25	1.25	1.25	1.25	2
Frame ground (⏚)	Wire size	mm^2	2	2	2	2	2	2
	Screw size	–	M4	M4	M4	M4	M4	M4
	Torque	N·m	1.2	1.2	1.2	1.2	1.2	1.2
No-fuse breaker or fuse capacity		A (rms)	4	4	4	4	8	11

上達科技有限公司
購買、維修 此手冊零組件
電話： 037-466333
Email: service@repairtw.com
www.repairtw.com

Note 1. Use the same wire sizes and tightening torques for ⊕1, ⊕2, B1, and B2.

Note 2. Connect an OMRON Servomotor Cable to the Servomotor connection terminals.

■ Wire Sizes and Allowable Current

The following table shows the allowable current for when there are three wires.

● 600-V Heat-resistant Vinyl Wiring (HIV) (Reference Values)

AWG size	Nominal cross-sectional area (mm^2)	Configuration (wires/mm^2)	Conductive resistance (Ω/km)	Allowable current (A) for ambient temperature		
				30°C	40°C	50°C
20	0.5	19/0.18	39.5	6.6	5.6	4.5
–	0.75	30/0.18	26.0	8.8	7.0	5.5
18	0.9	37/0.18	24.4	9.0	7.7	6.0
16	1.25	50/0.18	15.6	12.0	11.0	8.5
14	2.0	7/0.6	9.53	23	20	16
12	3.5	7/0.8	5.41	33	29	24
10	5.5	7/1.0	3.47	43	38	31
8	8.0	7/1.2	2.41	55	49	40
6	14.0	7/1.6	1.35	79	70	57

■ Terminal Block Wiring Procedure

Connector-type Terminal Blocks are used for SMARTSTEP A-series Servo Drivers. The procedure for wiring these Terminal Blocks is explained below.

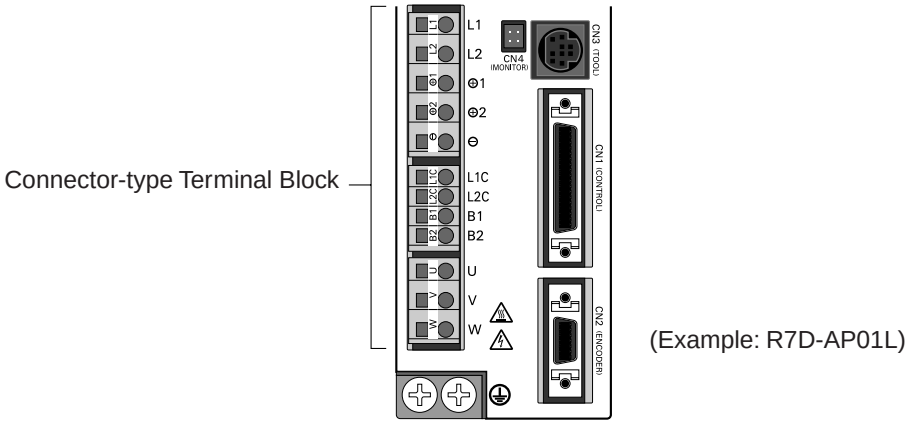

1. Remove the Terminal Block from the Servo Driver.

⚠ **Caution** The Terminal Block must be removed from the Servo Driver before being wired. The Servo Driver will be damaged if the wiring is done with the Terminal Block in place.

上正科技有限公司
購買、維修 此手冊零組件
電話： 037-466333
Email: service@repairtw.com
Line id: @zzz7
www.repairtw.com

2. Strip the covering off the ends of the wires.

Prepare wires of the right sizes, according to the tables provided under *Terminal Block Wire Sizes* above, and strip off 8 or 9 mm of the covering from the end of each wire.

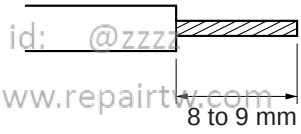

3. Open the wire insertion slots in the Terminal Block

There are two ways to open the wire insertion slots, as follows:

- Pry the slot open using the lever that comes with the Servo Driver (as in Fig. A).
- Insert a flat-blade screwdriver (end width: 3.0 to 3.5 mm) into the opening for Servo Driver installation, and press down firmly to open the slot (as in Fig. B).

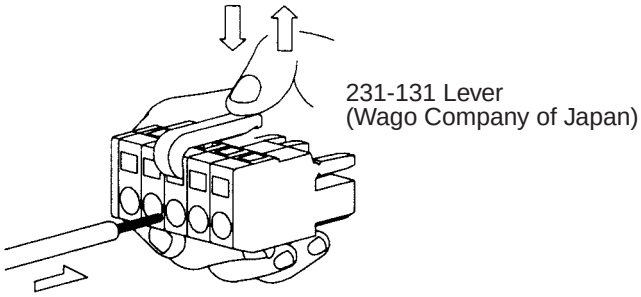

Fig. A

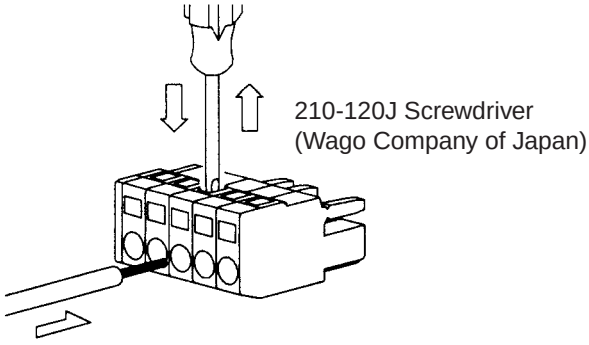

Fig. B

4. Insert the wire into the slot.

With the slot held open, insert the end of the wire. Then let the slot close by releasing the pressure from the lever or the screwdriver.

5. Mount the Terminal Block to the Servo Driver.

After all of the terminals have been wired, return the Terminal Block to its original position on the Servo Driver.

3-2-4 Wiring for Noise Resistance

System noise resistance will vary greatly depending on the wiring method used. This section explains how to reduce noise through proper wiring.

■ Wiring Method

● Single-phase Power Supply Input

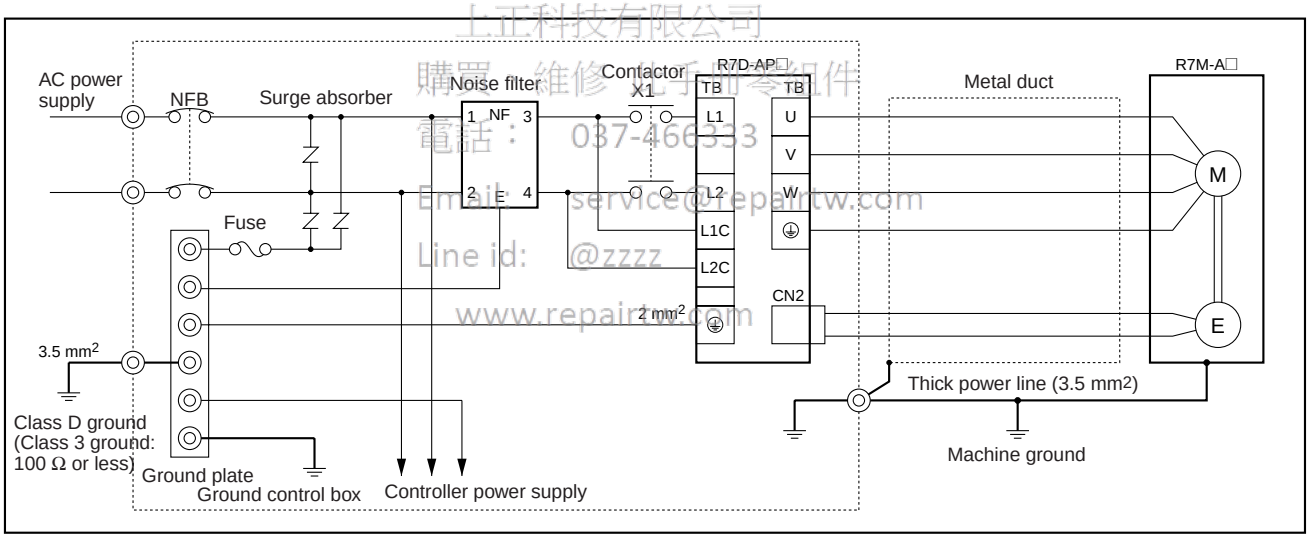

上正科技有限公司
購買、維修、電子零組件
電話： 037-466333
Email: service@repairtw.com
Line id: @zzzz
www.repairtw.com

● Three-phase Power Supply Input (R7D-AP08H)

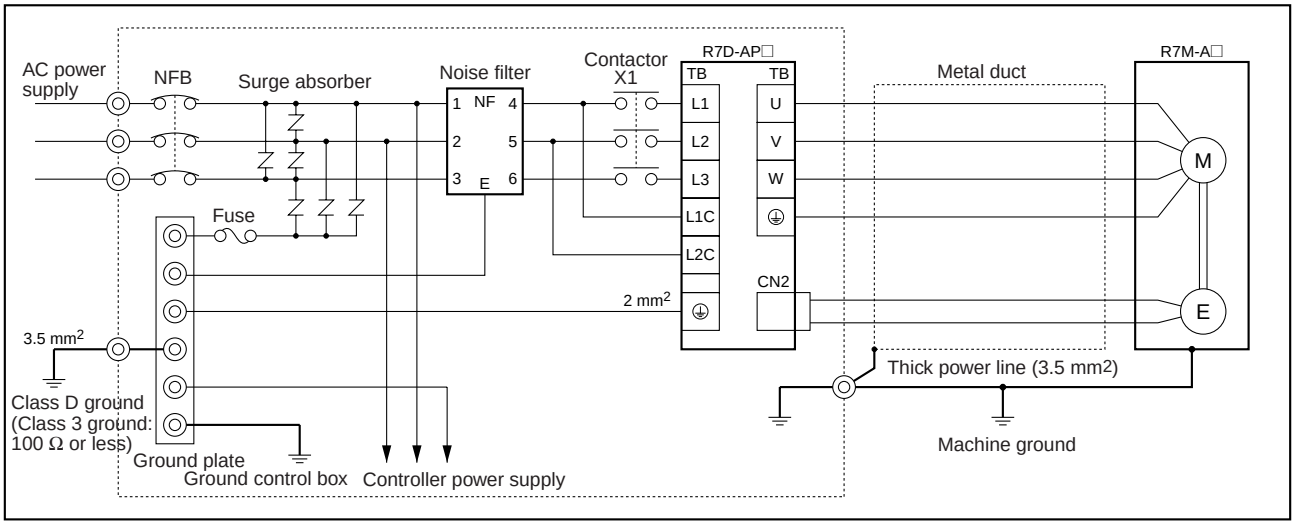

- Ground the motor's frame to the machine ground when the motor is on a movable shaft.
- Use a grounding plate for the frame ground for each Unit, as shown in the above diagrams, and ground to a single point.
- Use ground lines with a minimum thickness of 3.5 mm^2, and arrange the wiring so that the ground lines are as short as possible.
- If no-fuse breakers are installed at the top and the power supply line is wired from the lower duct, use metal tubes for wiring and make sure that there is adequate distance between the input lines and the internal wiring. If input and output lines are wired together, noise resistance will decrease.
- No-fuse breakers, surge absorbers, and noise filters (NF) should be positioned near the input terminal block (ground plate), and I/O lines should be isolated and wired using the shortest distance possible.
- Insert a fuse for short-circuit failure protection if a surge absorber is installed. As a guideline, select a fuse with three times the maximum instantaneous current.
- Wire the noise filter as shown at the left in the following illustration. The noise filter should be installed at the entrance to the control box whenever possible.

上元科技有限公司
購買、維修 此手冊零組件
電話： 037-466333
Email: service@repairtw.com
Line ID: @ycs
www.repairtw.com

Correct: Separate input and output

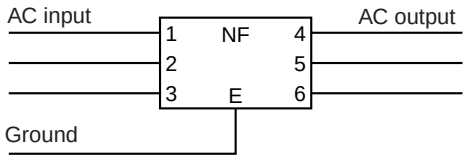

Wrong: Noise not filtered effectively

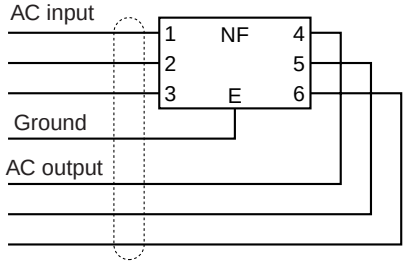

- Use twisted-pair cables for the power supply cables whenever possible, or bind the cables.

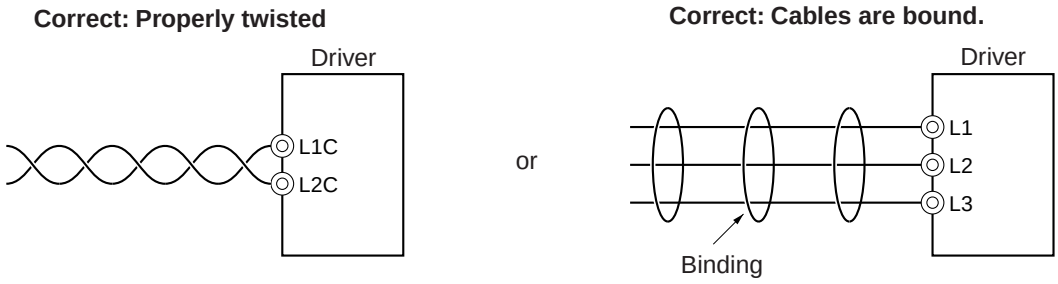

• Separate power supply cables and signal cables when wiring.

■ Selecting Components

This section explains the criteria for selecting the connection components required for improving noise resistance. These criteria include capacity performance, applicable range, and so on. For more details, contact the manufacturers directly.

● No-fuse Breakers (NFB)

When selecting no-fuse breakers, take into consideration the maximum output current and the inrush current.

上正科技有限公司
購買、維修 此手冊零組件
電話： 037-466333
Email: service@repairtw.com
Line Id: @2222
www.repairtw.com

Maximum input current:
The momentary maximum output for a Servo Driver is approximately three times that of the rated output, and a maximum output of three seconds can be executed. Therefore, select no-fuse breakers with an operating time of at least five seconds at 300% of the rated maximum output. General-purpose and low-speed no-fuse breakers are generally suitable. The table in *3-2-3 Terminal Block Wiring* shows the rated power supply input currents for each Servomotor. Select a no-fuse-breaker with a rated current greater than the total effective load current (when multiple Servomotors are used). When making the selection, add in the current consumption of other controllers, and so on.

Servo Driver inrush current:
With low-speed no-fuse breakers, an inrush current 10 times the rated current flows for 0.02 seconds. For a simultaneous inrush for multiple Servo Drivers, select a no-fuse-breaker with a 20-ms allowable current greater than the total inrush current shown in the following table for the applicable Servomotor models.

Smart Servo Driver	Power supply voltage V	Servo Driver model (R7D-)	Capacity	Rated current A (rms)	Inrush current circuit A (0-p)	125% of rated current	NFB model
Single-phase	100	APA3L	30 W	1.64	90	2.05	NF30-SW 10A
	100	APA5L	50 W	2.2	90	2.75	NF30-SW 10A
	100	AP01L	100 W	4	90	5	NF30-SW 10A
	100	AP02L	200 W	6.8	90	8.5	NF30-SW 10A
	100	AP04L	400 W	11	90	13.75	NF30-SW 15A

Smart Servo Driver	Power supply voltage V	Servo Driver model (R7D-)	Capacity	Rated current A (rms)	Inrush current circuit A (0-p)	125% of rated current	NFB model
Single-phase	200	APA3H	30 W	0.82	90	1.025	NF30-SW 10A
	200	APA5H	50 W	1.1	90	1.375	NF30-SW 10A
	200	AP01H	100 W	2	90	2.5	NF30-SW 10A
	200	AP02H	200 W	3.4	90	4.25	NF30-SW 10A
	200	AP04H	400 W	5.5	90	6.875	NF30-SW 10A
	200	AP08H	750 W	9.4	130	11.75	NF30-SW 15A

● Surge Absorbers

Use surge absorbers to absorb surges from power supply input lines due to lightning, abnormal voltages, etc. When selecting surge absorbers, take into account the varistor voltage, the amount of surge immunity, and the amount of energy resistance. The surge absorbers shown in the following table are recommended.

Maker	Model	Varistor voltage	Max. limit voltage	Surge immunity	Energy resistance	Type
Matsushita Electric	ERZC20EK471(W)	470 V	775 V	5,000 A	150 J	Block
	ERZC25EK471(W)	470 V	775 V	10,000 A	225 J	
	ERZC32EK471(W)	470 V	775 V	20,000 A	405 J	
Ishizuka Electronics Co.	Z25M471S	470 V	775 V	10,000A	235 J	Block
	Z33M471S	470 V	775 V	20,000 A	385 J	

日商貳有限公司
購買、維修 此手冊零組件
電話： 037-462333
Email: service@repairtw.com
Line Id: @2222
www.repairtw.com

Note 1. The (W) for the Matsushita models indicates that they are UL and CSA certified.

Note 2. Refer to the manufacturers' documentation for operating details.

Note 3. The surge immunity is for a standard impulse current of 8/20 µs. If pulses are wide, either decrease the current or change to a larger-capacity surge absorber.

Note 4. The energy resistance is the value for 2 ms. It may not be possible to retard high-energy pulses at less than 700 V. In that case, absorb surges with an insulated transformer or reactor.

● Noise Filters for Power Supply Input

Use a noise filter to attenuate extraneous noise and to diminish noise radiation from the Servo Driver. Select a noise filter with a load current of at least twice the rated current. The following table shows noise filters that reduce by 40 dB noise between 200 kHz and 30 MHz.

Type	Model	Rated current	Maker
Single-phase	GT-2050	5 A	Tokin
	LF-210N	10 A	
	LF-215N	15 A	
	LF-220N	20 A	

Type	Model	Rated current	Maker
Three-phase	LF-315K	15 A	Tokin
	LF-325K	25 A	
	LF-335K	35 A	
	ZCW2210-01	10 A	TDK
	ZCW2220-01	20 A	
	ZCW2230-01	30 A	
	ZCW2240-01	40 A	

Note 1. To attenuate noise at frequencies of 200 kHz or less, use an insulated transformer and a noise filter.

Note 2. For high frequencies of 30 MHz or more, use a ferrite core and a high-frequency noise filter with a through-type capacitor.

Note 3. If multiple Servo Drivers are to be connected to a single noise filter, select a noise filter with a rated current at least two times the total rated current of all the Servo Drivers.

● Noise Filters for Servomotor Output

Use noise filters without built-in capacitors on the Servomotor output lines. Select a noise filter with a rated current at least two times the total rated current of the Servo Driver's continuous output current. The following table shows the noise filters that are recommended for Servomotor output.

日昇科技有限公司
購買、維修、生產零組件
電話：037-466333
Email: service@repairtw.com
Line id: @zzzz
www.repairtw.com

Maker	Model	Rated current	Remarks
Tokin	LF-310KA	10 A	Three-phase block noise filter
	LF-320KA	20 A	

Note 1. Servomotor output lines cannot use the same noise filters used for power supplies.

Note 2. Typical noise filters are used with power supply frequencies of 50/60 Hz. If these noise filters are connected to outputs of 11.7 kHz (the Servo Driver's PWM frequency), a very large (about 100 times larger) leakage current will flow through the noise filter's condenser and the Servo Driver could be damaged.

● Surge Killers

Install surge killers for loads that have induction coils, such as relays, solenoids, brakes, clutches, etc. The following table shows types of surge killers and recommended products.

Type	Features	Recommended products
Diode	Diodes are relatively small devices such as relays used for loads when reset time is not an issue. The reset time is increased because the surge voltage is the lowest when power is cut off. Used for 24/48-V DC systems.	Use a fast-recovery diode with a short reverse recovery time. Fuji Electric Co., ERB44-06 or equivalent
Thyristor or Varistor	Thyristor and varistor are used for loads when induction coils are large, as in electromagnetic brakes, solenoids, etc., and when reset time is an issue. The surge voltage when power is cut off is approximately 1.5 times that of the varistor.	Select varistor voltage as follows: 24-V DC system: 39 V 100-V DC system: 200 V 100-V AC system: 270 V 200-V AC system: 470 V
Capacitor + resistor	Use capacitors and resistors for vibration absorption of surge when power is cut off. The reset time can be shortened by proper selection of the capacitor or resistor.	Okaya Electric Industries Co., Ltd. CR-50500 0.5 μF-50 Ω CRE-50500 0.5 μF-50 Ω S2-A-0 0.2 μF-500 Ω

Note Thyristors and varistors are made by the following companies. Refer to manufacturers documentation for operating details.Thyristors: Ishizuka Electronics Co.
Varistors: Ishizuka Electronics Co., Matsushita Electric Industrial Co.

● Contactors

When selecting contactors, take into consideration the circuit's inrush current and the maximum momentary current. The Servo Driver inrush current is covered in the preceding explanation of no-fuse-breaker selection, and the maximum momentary current is approximately twice the rated current. The following table shows the recommended contactors.

Maker	Model	Rated current	Coil voltage
OMRON	LC1-D093A60	11 A	200 V AC
	LC1D25106	26 A	
	LC1D40116	35 A	
	LC1D50116	50 A	
	LC1-D093A60	11 A	24 V DC
	LP1D25106	26 A	
	LP1D40116	35 A	
	LP1D50116	50 A	

上正科技有限公司
購買、維修 此手冊零組件
電話： 07-466333
Email: service@repairtw.com
Line id: @ccc
www.repairtw.com

● Leakage Breakers

Select leakage breakers designed for inverters.

Since switching takes place inside the Servo Drivers, harmonic current leaks from the armature of the motor. With inverter leakage breakers, harmonic current is not detected, preventing the breaker from operating due to leakage current.

When selecting leakage breakers, remember to also add the leakage current from devices other than the Servomotor, such as machines using a switching power supply, noise filters, inverters, and so on. For details on leakage breakers, refer to the manufacturer's catalog.

The following table shows the Servomotor leakage current for each Servo Driver model.

Driver	Leakage current (direct measurement) (including high-frequency current)
R7D-APA3L to -AP04L	29 mA
R7D-APA3H to -AP04H	14 mA
R7D-AP08H	16 mA

Note 1. The above leakage current is for cases where Servomotor power line length is less than 5 meters. (It varies depending on the Servomotor cable length and the insulation.)

Note 2. The above leakage current is for normal temperature and humidity. (It varies depending on the temperature and humidity.)

Leakage Breaker Connection Example

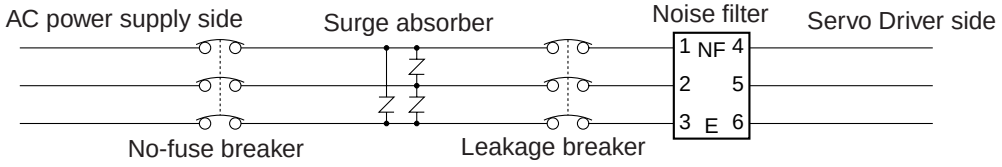

● Harmonic Current Countermeasures (DC Reactor)

The DC Reactor is used for suppressing harmonic currents. It suppresses sudden and quick changes in electric currents.

In September 1994, the Ministry of International Trade and Industry established guidelines for the suppression of harmonic waves emitted from home and general electric appliances. To comply with the guidelines, appropriate measures are required to suppress the influence of harmonic waves on power supply lines.

Select the proper DC Reactor model according to the Servo Driver that is to be used.

Servo Driver		DC Reactor			
		Model number	Rated current (A)	Inductance (mH)	Weight (kg)
100 V	R7D-APA3L/APA5L/AP01L	R88A-PX5063	1.8	10.0	Approx. 0.6
	R7D-AP02L	R88A-PX5062	3.5	4.7	Approx. 0.9
	R7D-AP04L	R88A-PX5061	4.8	2.0	Approx. 0.5
200 V	R7D-APA3H/APA5H/AP01H	R88A-PX5071	0.85	40.0	Approx. 0.5
	R7D-AP02H	R88A-PX5070	1.65	20.0	Approx. 0.8
	R7D-AP04H	R88A-PX5069	3.3	10.0	Approx. 1.0
	R7D-AP08H	R88A-PX5061	4.8	2.0	Approx. 0.5

DC Reactor Connection Example

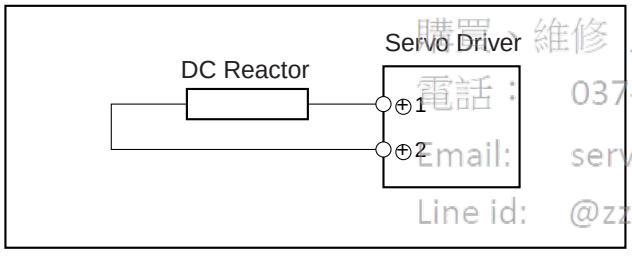

上正科技有限公司
購買、維修 此手冊零組件
電話： 037-466333
Email: service@repairtw.com
Line id: @zzzz
www.repairtw.com

■ Improving Encoder Cable Noise Resistance

In order to improve the encoder's noise resistance, take the following measures for wiring and installation.

- Always use the specified Encoder Cables.
- If lines are interrupted in the middle, be sure to connect them with connectors, making sure that the cable insulation is not peeled off for more than 50 mm. In addition, always use shielded cable.
- Do not coil cables. If cables are long and are coiled, mutual induction and inductance will increase and will cause malfunctions. Always use cables fully extended.
- When installing noise filters for Encoder Cables, use clamp filters. The following table shows the recommended clamp filter models.

Maker	Name	Model
Tokin	EMI core	ESD-QR-25-1
TDK	Clamp filter	ZCAT2032-0930
		ZCAT3035-1330
		ZCAT2035-0930A

- Do not place the Encoder Cable in the same duct as Control Cables for brakes, solenoids, clutches, and valves.

■ Improving Control I/O Signal Noise Resistance

Positioning can be affected and I/O signals can error if control I/O is influenced by noise. Follow the methods outlined below for the power supply and wiring.

- Use completely separate power supplies for the control power supply (especially 24 V DC) and the external operation power supply. In particular, be careful not to connect the two power supply ground wires. Install a noise filter on the primary side of the control power supply.
- If Servomotors with brakes are used, do not share the 24-V DC power supply for brakes with the 24-V DC power supply for control I/O. Additionally, do not connect ground wires. Connecting ground wires may cause I/O signal errors.
- As much as possible, keep the power supply for pulse command and deviation counter reset input lines separate from the control power supply. Be particularly careful not to connect the two power supply ground lines.
- It is recommended that a line driver be used for pulse command and deviation counter reset outputs.
- Always use twisted-pair shielded cable for pulse command and deviation counter reset signal lines, and connect both ends of the shield to frame grounds.
- If the control power supply wiring is long, noise resistance can be improved by adding 1-μF laminated ceramic capacitors between the control power supply and ground at the Servo Driver input section or the controller output section.
- For open-collector specifications, keep the length of wires to within two meters.

上正科技有限公司
購買、維修 此手冊零組件
電話： 037-466333
E-mail: service@repairtw.com
Line id: @zzzz
www.repairtw.com

3-2-5 Conforming to EMC Directives

Conformance to EMC Directives (EN55011 class A group 1 (EMI) and EN61000-6-2 (EMS)) can be ensured by wiring under the conditions described below. These conditions are for conformance of SMARTSTEP A-series products to EMC Directives. EMC-related performance of these products, however, will vary depending on the configuration, wiring, and other conditions of the equipment in which the products are installed. The customer must, therefore, perform final checks to confirm that devices and the overall installation conform to EMC Directives.

The following conditions must be met to conform to EMC Directives.

- The Servo Driver must be installed in a metal case (control panel). (The Servo Motor does not, however, have to be covered with a metal plate.)
- Noise filters and surge absorbers must be installed on all power supply lines.
- Shielded cables must be used for all I/O signal lines and encoder lines. (Use tin-plated, soft copper wires for the shield weaving.)
- All cables leaving the control panel must be wired in metal ducts or conduits with blades. (The 30-cm power cable, encoder cable, and connector do not have to be inserted in metal ducts or conduits.)
- Ferrite cores must be attached to the shielded cable and the shield must be clamped directly to the ground plate to ground it.

■ Wiring Method

● Single-phase Power Supply Input

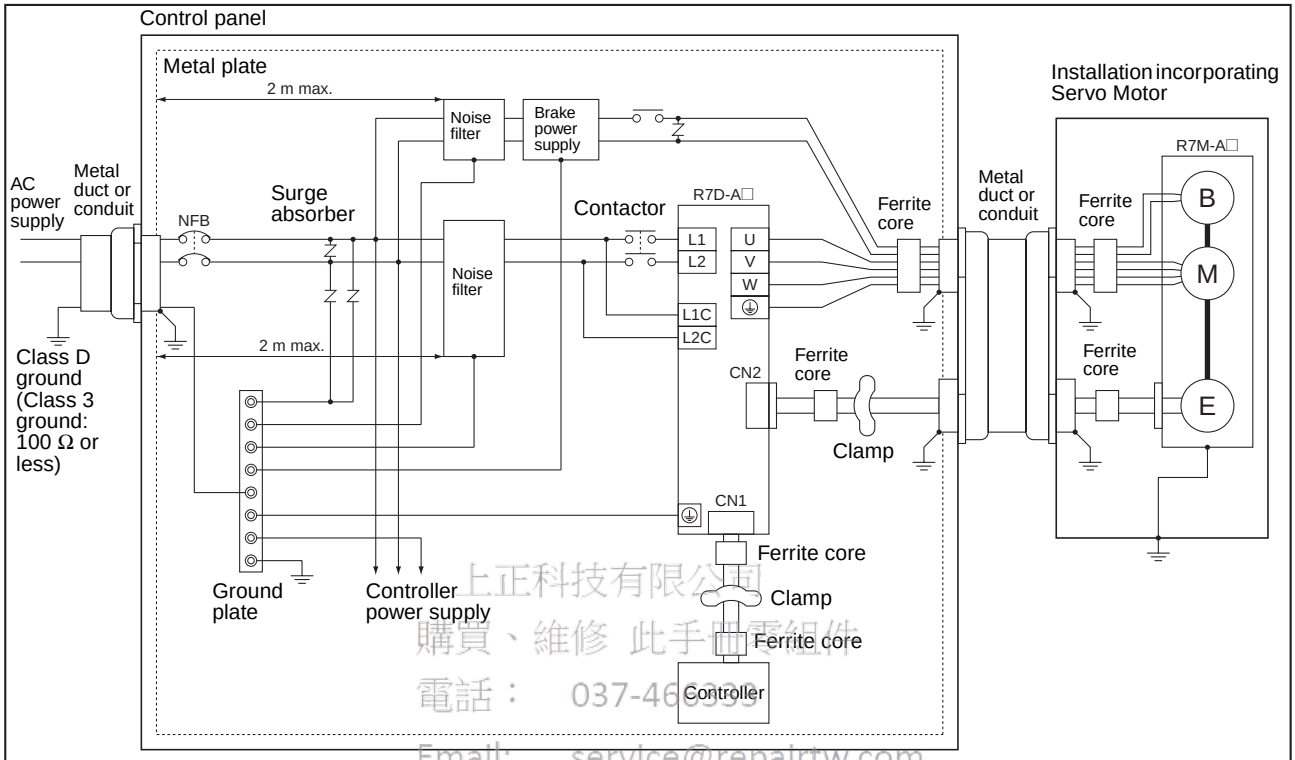

Note 1. The cable wiring for the ferrite core must be 1.5 turns.

Note 2. Remove the sheath from the cable and ground it directly to the metal plate at the clamps.

上正科技有限公司
購買、維修 此手冊零組件
電話： 037-46333
Email: service@repairtw.com
Line id: @zzzz
www.repairtw.com

● Three-phase Power Supply Input (R7D-AP08H)

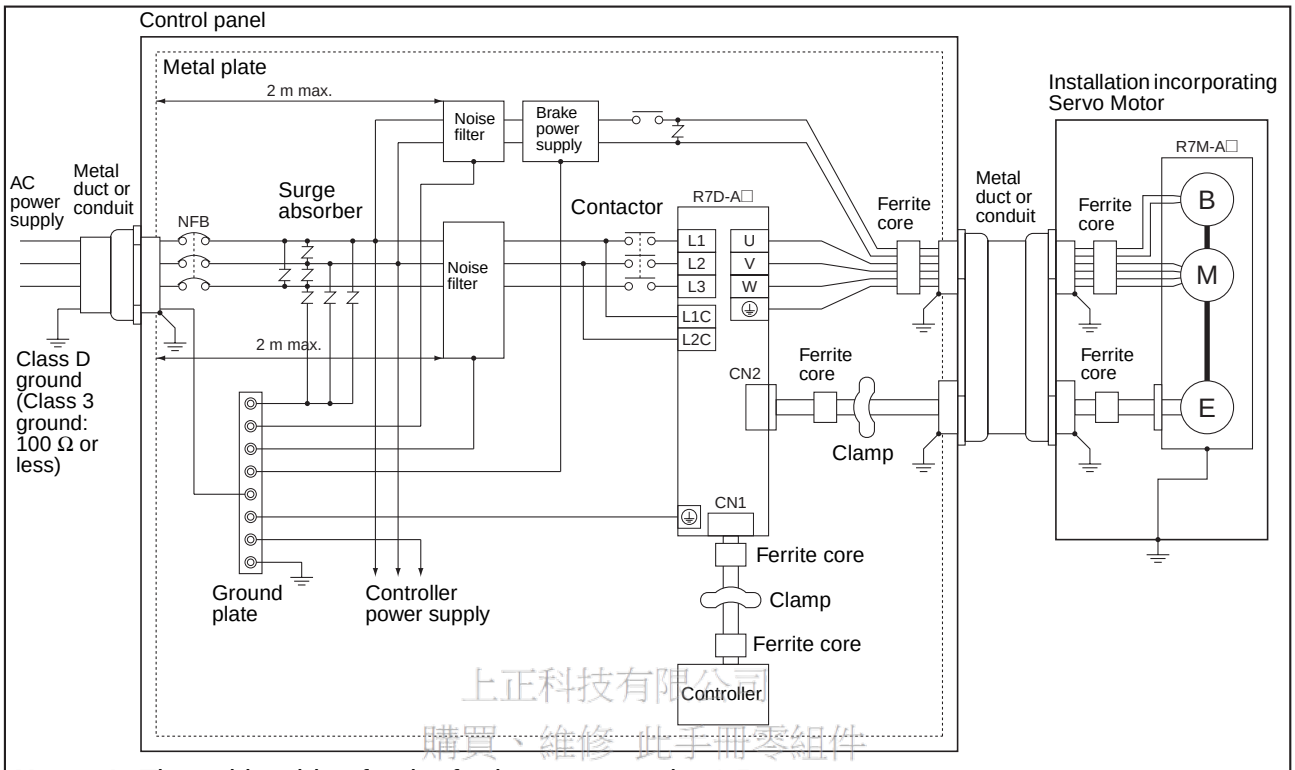

上正科技有限公司
購買、維修 此手冊零組件
電話： 037-466333
Email: service@repairtw.com
Line id: @zzzz
www.repairtw.com

Note 1. The cable wiring for the ferrite core must be 1.5 turns.

Note 2. Remove the sheath from the cable and ground it directly to the metal plate at the clamps.

- Ground the motor's frame to the machine ground when the motor is on a movable shaft.
- Use a grounding plate for the frame ground for each Unit, as shown in the above diagrams, and ground to a single point.
- Use ground lines with a minimum thickness of 3.5 mm^2, and arrange the wiring so that the ground lines are as short as possible.
- If no-fuse breakers are installed at the top and the power supply line is wired from the lower duct, use metal tubes for wiring and make sure that there is adequate distance between the input lines and the internal wiring. If input and output lines are wired together, noise resistance will decrease.
- No-fuse breakers, surge absorbers, and noise filters (NF) should be positioned near the input terminal block (ground plate), and I/O lines should be isolated and wired using the shortest distance possible.
- Wire the noise filter as shown at the left in the following illustration. The noise filter should be installed at the entrance to the control box whenever possible.

Correct: Separate input and output

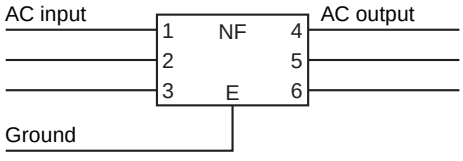

Wrong: Noise not filtered effectively

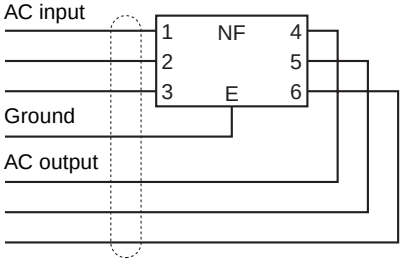

- Use twisted-pair cables for the power supply cables whenever possible, or bind the cables.

Correct: Properly twisted

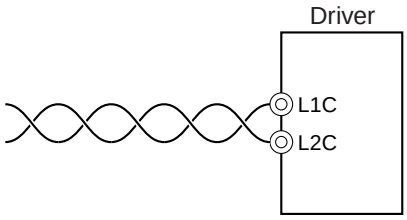

or

Correct: Cables are bound.

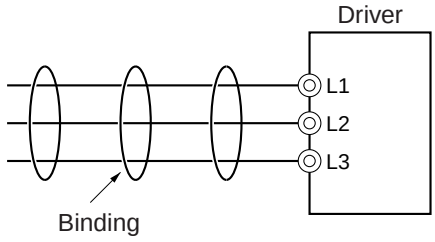

- Separate power supply cables and signal cables when wiring.

■ Control Panel Structure

Any gaps in the cable entrances, mounting holes, covers, or other parts of a control panel can allow electromagnetic waves to leak from or enter the control panel. Observe the following items for panel design and selection to ensure that electromagnetic waves cannot leak from or enter the control panel.

上正科技有限公司
購買、維修 此手冊零組件
電話： 037-466333
Email: service@repairtw.com
Line id: @zzzz
www.repairtw.com

● Case Structure

- Use a metal control panel with welded joints on the top, bottom, and all sides. The case must be electrically conductive.
- When assembling the control panel, remove the coating from all joints (or mask the joints when coating) to ensure electrical conductivity.
- Be sure that no gaps are created when installing the control panel, as gaps can be caused by distortion when tightening screws.
- Be sure there are not any electrically conductive parts that are not in electrical contact.
- Ground all Units mounted in the control panel to the panel case.

● Cover Structure

- Use a metal cover.
- Use a water-proof structure, as shown in the following diagram, and be sure there are no gaps.
- Use electrically conductive packing between the cover and the case, as shown in the following diagram. (Remove the coating from the contact points of the packing (or mask the contact points when coating) to ensure electrical conductivity.)

- Be sure that no gaps are created when installing the cover, as gaps can be caused by distortion when tightening screws.

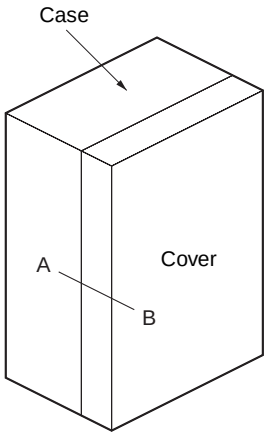

Control Panel

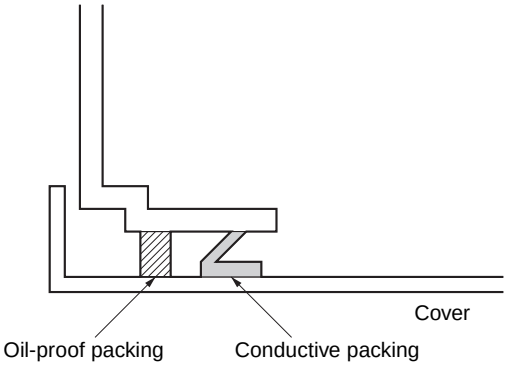

A-B Cross-section

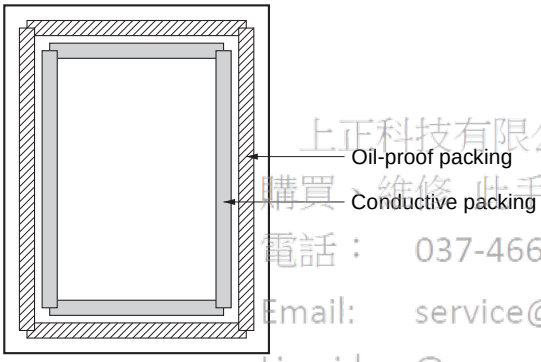

Case (Inside)

上正科技有限公司
購買、維修 此手冊零組件
電話： 037-466333
Email: service@repairtw.com
Line id: @zzzz
www.repairtw.com

■ Selecting Components

This section explains the criteria for selecting the connection components required for improving noise resistance. These criteria include capacity performance, applicable range, and so on. For more details, contact the manufacturers directly.

● No-fuse Breakers (NFB)

When selecting no-fuse breakers, take into consideration the maximum output current and the inrush current.

Maximum input current:

The momentary maximum output for a Servo Driver is approximately three times that of the rated output, and a maximum output of three seconds can be executed. Therefore, select no-fuse breakers with an operating time of at least five seconds at 300% of the rated maximum output. General-purpose and low-speed no-fuse breakers are generally suitable. The table in *3-2-3 Terminal Block Wiring* shows the rated power supply input currents for each Servomotor. Select a no-fuse-breaker with a rated current greater than the total effective load current (when multiple Servomotors are used). When making the selection, add in the current consumption of other controllers, and so on.

Servo Driver inrush current:
With low-speed no-fuse breakers, an inrush current 10 times the rated current flows for 0.02 seconds. For a simultaneous inrush for multiple Servo Drivers, select a no-fuse-breaker with a 20-ms allowable current greater than the total inrush current shown in the following table for the applicable Servomotor models.

Servo Driver	Inrush current (A0-p)	
	Control-circuit power supply	Main-circuit power supply
R7D-APA3L to -AP02L	30	90
R7D-AP04L	30	90
R7D-APA3H to -AP04H	60	90
R7D-AP08H	60	130

● Surge Absorbers

Use surge absorbers to absorb surges from power supply input lines due to lightning, abnormal voltages, etc. When selecting surge absorbers, take into account the varistor voltage, the amount of surge immunity, and the amount of energy resistance. The surge absorbers shown in the following table are recommended.

Maker	Model	Max. limit voltage	Surge immunity	Type	Remarks
Okaya Electric Industries Co., Ltd.	R·A·V-781BYZ-2	783 V	1,000 A	Block	For power supply line
	R·A·V-781BXZ-4	78 V	1,000 A		For power supply line ground

上正科技有限公司
購買、維修 此手冊零組件
電話： 037-466333
Email: service@repairtw.com
Line id: @zzz
www.repairtw.com

Note 1. Refer to the manufacturers' documentation for operating details.

Note 2. The surge immunity is for a standard impulse current of 8/20 µs. If pulses are wide, either decrease the current or change to a larger-capacity surge absorber.

● Noise Filters for Power Supply Input

Use the appropriate noise filter from among those in the following table for the Servo Driver power supply.

Servo Driver		Noise filter for power supply input				
		Model	Rated current	Rated voltage	Leakage current*	Manufacturer
R7D-APA3L to -AP01L		FN2070-10/07	10 A	250 V	0.4 mA/phase	Schaffner
R7D-AP02L to -AP04L		FN2070-16/07	16 A			
R7D-APA3H to -AP02H		FN2070-6/07	6 A	250 V	0.4 mA/phase	Schaffner
R7D-AP04H		FN2070-10/07	10 A			
R7D-AP08H	Single-phase	FN2070-16/07	16 A	250 V	0.4 mA/phase	Schaffner
	Three-phase	FN258L-16/07	16 A	480 V	2.5 mA (at 250 Vrms, 50 Hz)	

Note The last 2 digits in the noise filter's model number indicate the type of connection terminals used. "07" indicates lead-wire terminals. There are also models with soldered faston terminals ("06") and screw terminals ("08"). Use the appropriate noise filter for the application. For details, contact the manufacturer.

Dimensions

(The dimensions given below are for noise filters with lead-wire terminals. For the dimensions of noise filters with different types of terminals, contact the manufacturer.)

For single-phase input (FN2070-6/07, FN2070-10/07)

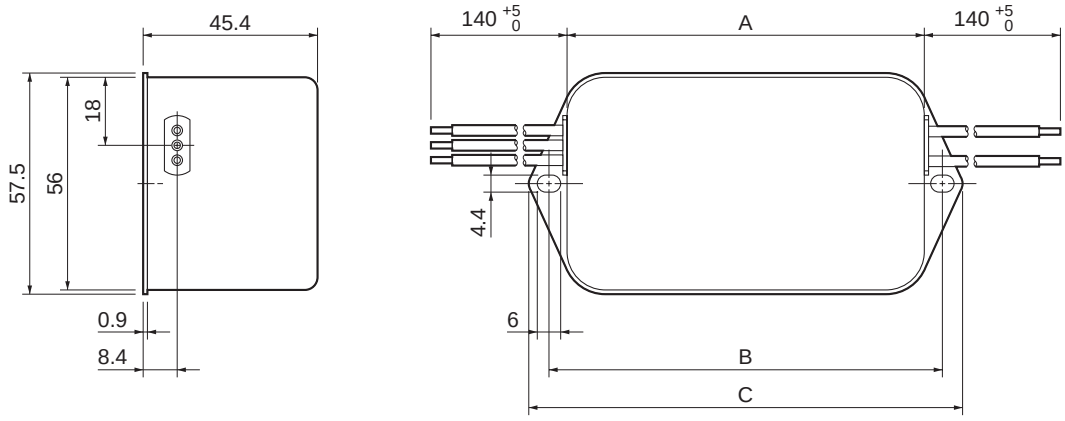

Model	A	B	C
FN2070-6/07	94 mm	103 mm	113.6 mm
FN2070-10/07	130.5 mm	143 mm	156 mm

上正科技有限公司
購買、維修 此手冊零組件
電話： 037-466333
Email: service@repairtw.com
Line id: @zzzz
www.repairtw.com

For single-phase input (FN2070-16/07)

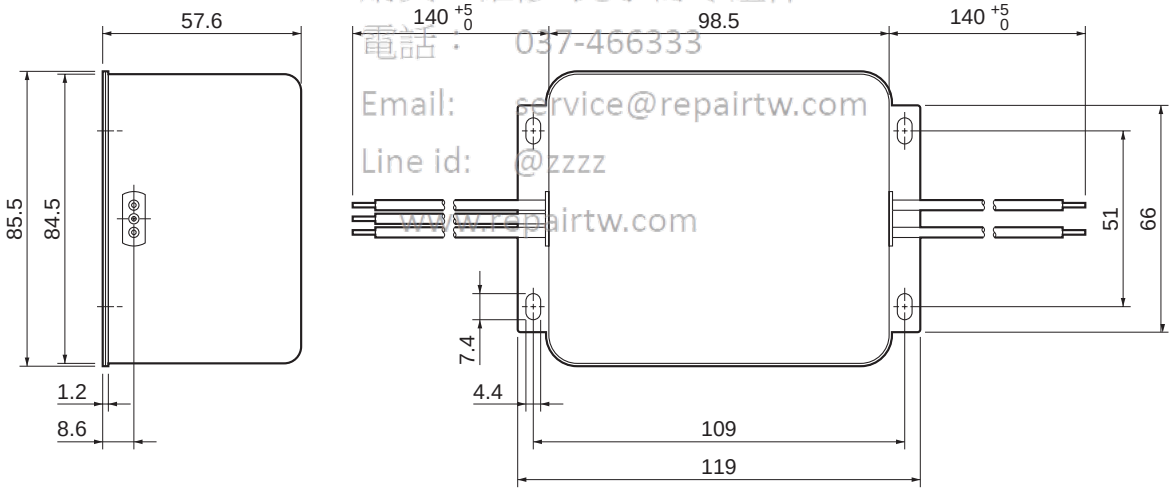

For three-phase input (FN258L-16/07)

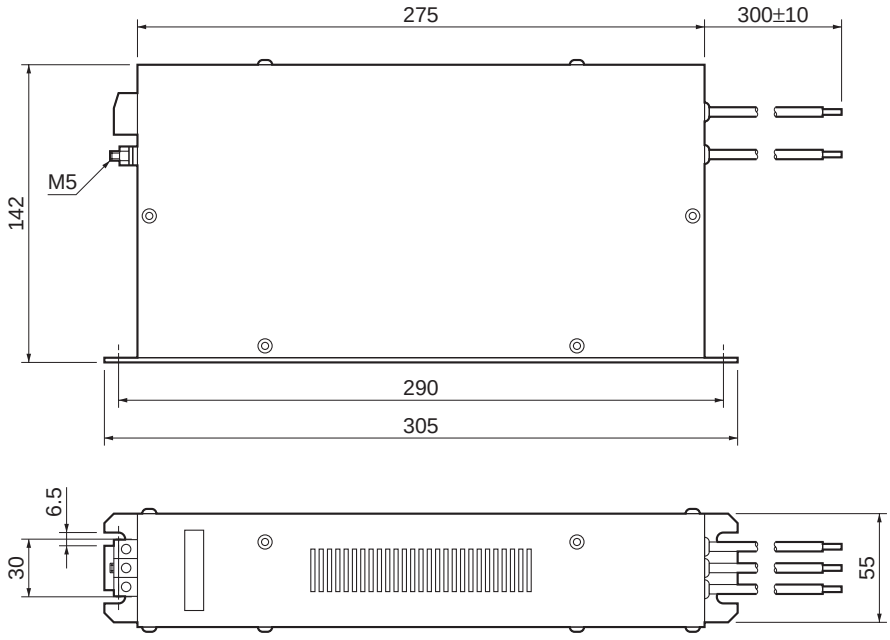

上正科技有限公司
購買、維修 此手冊零組件
電話： 037-466333
Email: service@repairtw.com
Line id: @zzzz
www.repairtw.com

● Noise filter for brake power supply

Use the following noise filter for the brake power supply.

Model	Rated current	Rated voltage	Leakage current	Manufacturer
SUP-P5H-EPR	5 A	250 V	0.6 mA (at 250 Vrms, 60 Hz)	Okaya Electric Industries Co., Ltd.

Dimensions

Noise filter for brake power supply (SUP-P5H-EPR)

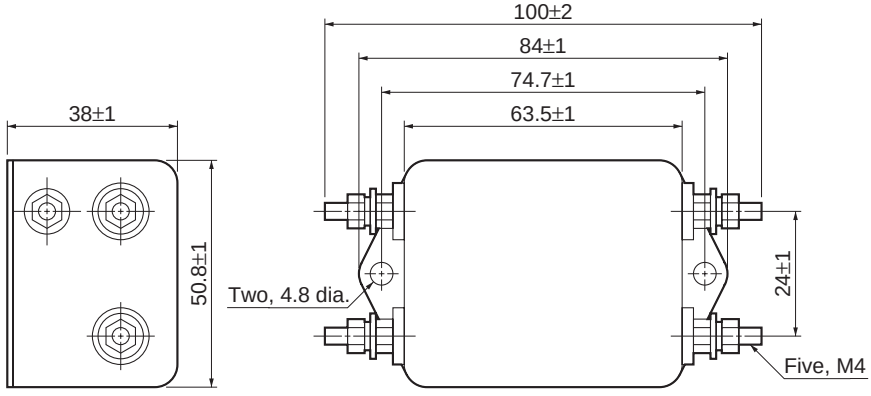

● Surge Killers

Install surge killers for loads that have induction coils, such as relays, solenoids, brakes, clutches, etc. The following table shows types of surge killers and recommended products.

Type	Features	Recommended products
Diode	Diodes are relatively small devices such as relays used for loads when reset time is not an issue. The reset time is increased because the surge voltage is the lowest when power is cut off. Used for 24/48-V DC systems.	Use a fast-recovery diode with a short reverse recovery time. Fuji Electric Co., ERB44-06 or equivalent
Thyristor or Varistor	Thyristor and varistor are used for loads when induction coils are large, as in electromagnetic brakes, solenoids, etc., and when reset time is an issue. The surge voltage when power is cut off is approximately 1.5 times that of the varistor.	Select varistor voltage as follows: 24-V DC system: 39 V 100-V DC system: 200 V 100-V AC system: 270 V 200-V AC system: 470 V
Capacitor + resistor	Use capacitors and resistors for vibration absorption of surge when power is cut off. The reset time can be shortened by proper selection of the capacitor or resistor.	Okaya Electric Industries Co., Ltd. CR-50500 0.5 μF-50 Ω CRE-50500 0.5 μF-50 Ω S2-A-0 0.2 μF-500 Ω

Note Thyristors and varistors are made by the following companies. Refer to manufacturers documentation for operating details.Thyristors: Ishizuka Electronics Co.
Varistors: Ishizuka Electronics Co., Matsushita Electric Industrial Co.

上正科技有限公司
購買、維修 此手冊零組件
電話： 03-4662333
Email: service@repairtw.com
Line Id: @2222
www.repairtw.com

● Contactors

When selecting contactors, take into consideration the circuit's inrush current and the maximum momentary current. The Servo Driver inrush current is covered in the preceding explanation of no-fuse-breaker selection, and the maximum momentary current is approximately twice the rated current. The following table shows the recommended contactors.

Maker	Model	Rated current	Coil voltage
OMRON	LC1-D093A60	11 A	200 V AC
	LC1D25106	26 A	
	LC1D40116	35 A	
	LC1D50116	50 A	
	LC1-D093A60	11 A	24 V DC
	LP1D25106	26 A	
	LP1D40116	35 A	
	LP1D50116	50 A	

● Leakage Breakers

Select leakage breakers designed for inverters.

Since switching takes place inside the Servo Drivers, harmonic current leaks from the armature of the motor. With inverter leakage breakers, harmonic current is not detected, preventing the breaker from operating due to leakage current.

When selecting leakage breakers, remember to also add the leakage current from devices other than the Servomotor, such as machines using a switching power supply, noise filters, inverters, and so on. For details on leakage breakers, refer to the manufacturer's catalog.

The following table shows the Servomotor leakage current for each Servo Driver model.

Driver	Leakage current (direct measurement) (including high-frequency current)
R7D-APA3L to -AP04L	29 mA
R7D-APA3H to -AP04H	14 mA
R7D-AP08H	16 mA

Note 1. The above leakage current is for cases where Servomotor power line length is less than 5 meters. (It varies depending on the Servomotor cable length and the insulation.)

Note 2. The above leakage current is for normal temperature and humidity. (It varies depending on the temperature and humidity.)

Leakage Breaker Connection Example

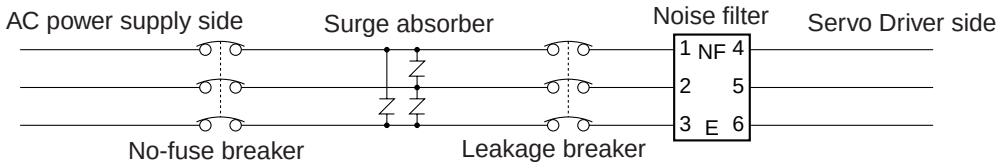

上正科技有限公司
購買、維修 此手冊零組件
電話： 037-466333
Email: service@repairtw.com
www.repairtw.com

■ Improving Encoder Cable Noise Resistance

In order to improve the encoder's noise resistance, take the following measures for wiring and installation.

- Always use the specified Encoder Cables.
- If lines are interrupted in the middle, be sure to connect them with connectors, making sure that the cable insulation is not peeled off for more than 50 mm. In addition, always use shielded cable.
- Do not coil cables. If cables are long and are coiled, mutual induction and inductance will increase and will cause malfunctions. Always use cables fully extended.
- When installing noise filters for Encoder Cables, use clamp filters. The following table shows the recommended clamp filter models.

Maker	Name	Model
Tokin	EMI core	ESD-SR-25
TDK	Clamp filter	ZCAT2032-0930
		ZCAT3035-1330
		ZCAT2035-0930A

- Do not place the Encoder Cable in the same duct as Control Cables for brakes, solenoids, clutches, and valves.

■ Improving Control I/O Signal Noise Resistance

Positioning can be affected and I/O signals can error if control I/O is influenced by noise. Follow the methods outlined below for the power supply and wiring.

- Use completely separate power supplies for the control power supply (especially 24 V DC) and the external operation power supply. In particular, be careful not to connect the two power supply ground wires. Install a noise filter on the primary side of the control power supply.

- If Servomotors with brakes are used, do not share the 24-V DC power supply for brakes with the 24-V DC power supply for control I/O. Additionally, do not connect ground wires. Connecting ground wires may cause I/O signal errors.
- As much as possible, keep the power supply for pulse command and deviation counter reset input lines separate from the control power supply. Be particularly careful not to connect the two power supply ground lines.
- It is recommended that a line driver be used for pulse command and deviation counter reset outputs.
- Always use twisted-pair shielded cable for pulse command and deviation counter reset signal lines, and connect both ends of the shield to frame grounds.
- If the control power supply wiring is long, noise resistance can be improved by adding 1-μF laminated ceramic capacitors between the control power supply and ground at the Servo Driver input section or the controller output section.
- For open-collector specifications, keep the length of wires to within two meters.

上正科技有限公司
購買、維修 此手冊零組件
電話： 037-466333
Email: service@repairtw.com
Line id: @zzzz
www.repairtw.com

3-3 Regenerative Energy Absorption

The Servo Drivers have internal regenerative energy absorption circuitry for absorbing the regenerative energy produced during time such as Servomotor deceleration, and thus preventing the DC voltage from increasing. An overvoltage error is generated, however, if the amount of regenerative energy from the Servomotor is too large. If this occurs, measures must be taken to reduce the regenerative energy produced by changing operating patterns, and so on, or to improve the regenerative energy absorption capacity by connecting external regeneration resistance.

3-3-1 Regenerative Energy Calculation

■ Horizontal Axis

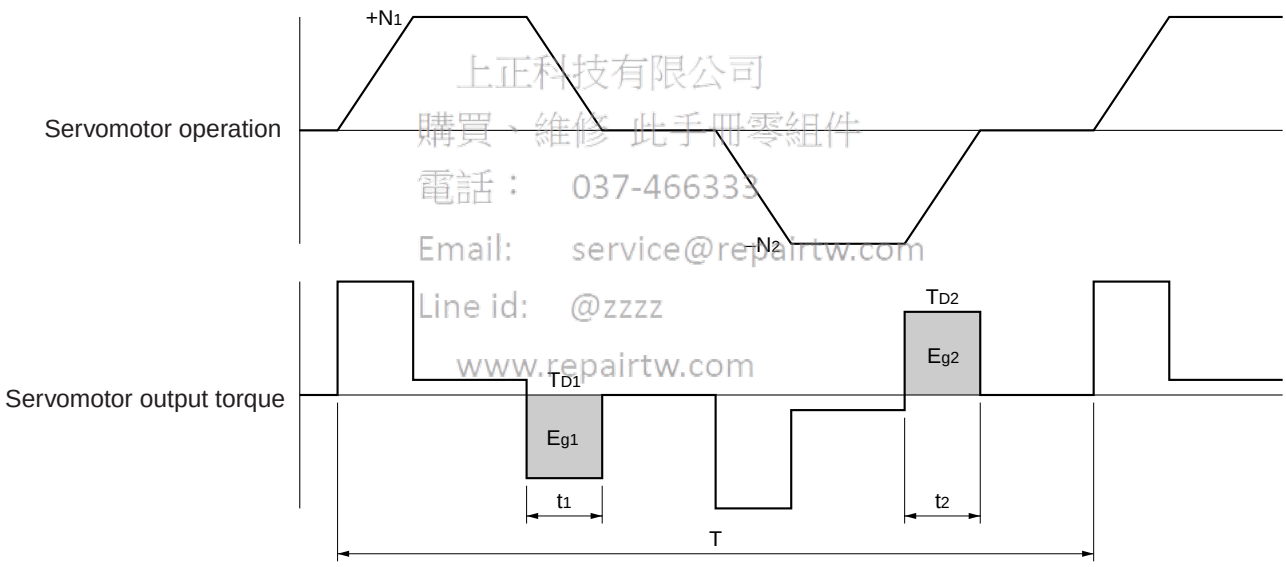

上正科技有限公司
購買、維修 此手冊零組件
電話： 037-466333
Email: service@repairtw.com
Line id: @zzzz
www.repairtw.com

Note In the output torque graph, acceleration in the positive direction is shown as positive, and acceleration in the negative direction is shown as negative.

• The regenerative energy values for E_{g1} and E_{g2} are derived from the following equations.

• $E_{g1} = \frac{1}{2} \bullet \frac{2\pi}{60} \bullet N_1 \bullet T_{D1} \bullet t_1$ [J] $= 0.0524 \bullet N_1 \bullet T_{D1} \bullet t_1$ [J]

• $E_{g2} = \frac{1}{2} \bullet \frac{2\pi}{60} \bullet N_2 \bullet T_{D2} \bullet t_2$ [J] $= 0.0524 \bullet N_2 \bullet T_{D2} \bullet t_2$ [J]

N_1, N_2: Rotation speed at beginning of deceleration [r/min]
T_{D1}, T_{D2}: Deceleration torque [N·m]
t_1, t_2: Deceleration time [s]

Note There is some loss due to winding resistance, so the actual regenerative energy will be approximately 90% of the values derived from these equations.

- For Servo Driver models with internal capacitors for absorbing regenerative energy (i.e., models of 400 W or less.), the values for both Eg1 or Eg2 (unit: J) must be lower than the Servo Driver's regenerative energy absorption capacity. (The capacity varies depending on the model. For details, refer to *3-3-2 Servo Driver Regenerative Energy Absorption Capacity*.)
- For Servo Driver models with internal regeneration resistance for absorbing regenerative energy (i.e., models of 750 W), the average amount of regeneration P_r (unit: W) must be calculated, and this value must be lower than the Servo Driver's regenerative energy absorption capacity. (For details, refer to *3-3-2 Servo Driver Regenerative Energy Absorption Capacity*.)

  The average amount of regeneration (P_r) is the power consumed by regeneration resistance in one cycle of operation.

  $P_r = (E_{g1} + E_{g2})/T$ [W]
  T: Operation cycle [s]

■ Vertical Axis

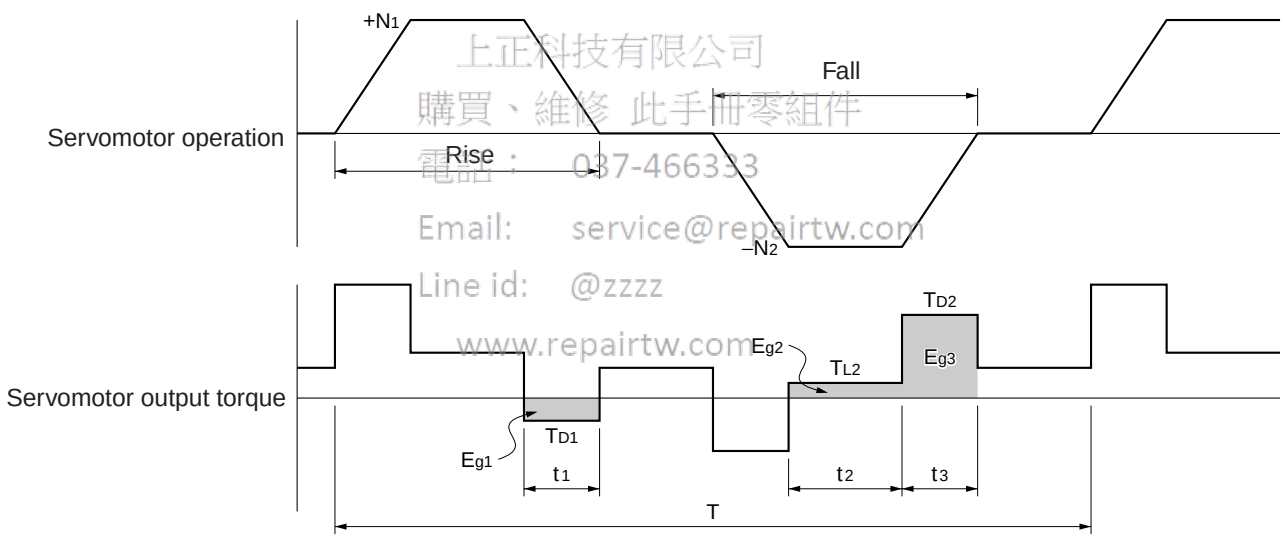

上正科技有限公司
購買、維修 此手冊零組件
電話： 037-466333
Email: service@repairtw.com
Line id: @zzzz
www.repairtw.com

Note In the output torque graph, acceleration in the positive direction (rise) is shown as positive, and acceleration in the negative direction (fall) is shown as negative.

- The regenerative energy values for E_{g1}, E_{g2}, and E_{g3} are derived from the following equations.

- $E_{g1} = \frac{1}{2} \bullet \frac{2\pi}{60} \bullet N_1 \bullet T_{D1} \bullet t_1$ [J] $= 0.0524 \bullet N_1 \bullet T_{D1} \bullet t_1$ [J]
- $E_{g2} = \frac{2\pi}{60} \bullet N_2 \bullet T_{L2} \bullet t_2$ [J] $= 0.105 \bullet N_2 \bullet T_{L2} \bullet t_2$ [J]
- $E_{g3} = \frac{1}{2} \bullet \frac{2\pi}{60} \bullet N_2 \bullet T_{D2} \bullet t_3$ [J] $= 0.0524 \bullet N_2 \bullet T_{D2} \bullet t_3$ [J]

N_1, N_2: Rotation speed at beginning of deceleration [r/min]
T_{D1}, T_{D2}: Deceleration torque [N·m]
T_{L2}: Torque when falling [N·m]
t_1, t_3: Deceleration time [s]
t_2: Constant-velocity travel time when falling [s]

Note There is some loss due to winding resistance, so the actual regenerative energy will be approximately 90% of the values derived from these equations.

- For Servo Driver models with internal capacitors for absorbing regenerative energy (i.e., models of 400 W or less.), the values for both E_{g1} or [E_{g2}+E_{g3}] (unit: J) must be lower than the Servo Driver's regenerative energy absorption capacity. (For details, refer to *3-3-2 Servo Driver Regenerative Energy Absorption Capacity*.)
- For Servo Driver models with internal regeneration resistance for absorbing regenerative energy (i.e., models of 750 W), the average amount of regeneration P_r (unit: W) must be calculated, and this value must be lower than the Servo Driver's regenerative energy absorption capacity. (For details, refer to *3-3-2 Servo Driver Regenerative Energy Absorption Capacity*.)

  The average amount of regeneration (P_r) is the power consumed by regeneration resistance in one cycle of operation.

  $P_r = (E_{g1} + E_{g2} + E_{g3})/T$ [W]
  T: Operation cycle [s]

上正科技有限公司
購買、維修 此手冊委組件
電話: 037-406393
Email: service@repairtw.com
Line id: @zzzz
www.repairtw.com

3-3-2 Servo Driver Regenerative Energy Absorption Capacity

■ Amount of Internal Regeneration Resistance in Servo Drivers

SMARTSTEP A-series Servo Drivers absorb regenerative energy by means of internal capacitors or resistors. If the regenerative energy is more than can be processed internally, an overvoltage error is generated and operation cannot continue. The following table shows the regenerative energy (and amount of regeneration) that the individual Servo Drivers themselves can absorb. If these values are exceeded, take the following measures.

- Connect external regeneration resistance (to improve the regeneration processing capacity).
- Reduce the operating rotation speed. (The amount of regeneration is proportional to the square of the rotation speed.)
- Lengthen the deceleration time (to decrease the regenerative energy produced per time unit).
- Lengthen the operation cycle, i.e., the cycle time (to decrease the average regenerative power).

Note External Regeneration Resistors cannot be connected to 30- to 200-W Servo Drivers.

Servo Driver	Regenerative energy (J) that can be absorbed by internal capacitor (See note 1.)	Internal regeneration resistance	
		Average amount of regeneration that can be absorbed (W)	Resistance (Ω)
R7D-APA3L	57.1	–	–
R7D-APA5L	57.1	–	–
R7D-AP01L	57.1	–	–
R7D-AP02L	57.1	–	–
R7D-AP04L	57.1	–	–
R7D-APA3H	18.5	–	–
R7D-APA5H	18.5	–	–
R7D-AP01H	37.1	–	–
R7D-AP02H	37.1	–	–
R7D-AP04H	37.1	–	–
R7D-AP08H	–	12	50

Note These are the values at 100 V AC for 100-V AC models, and at 200 V AC for 200-V AC models.

上正科技有限公司
購買、維修 此手冊零組件
電話: 037-466333
Email: service@repairtw.com
Line id: @zzz
www.repairtw.com

3-3-3 Regenerative Energy Absorption by External Regeneration Resistance

For 400- to 750-W Servo Drivers, if the regenerative energy exceeds the absorption capacity of the Servo Driver by itself, then external regeneration resistance can be connected.
A Resistor or Unit can be used alone or in combination with other Resistors/Units to provide the required regeneration processing capacity.

⚠ **Caution** Connect the External Regeneration Resistor or External Regeneration Resistance Unit between the Servo Driver's B1 and B2 terminals. Check the terminal names carefully when connecting to the terminals. If the Resistor or Unit is connected to the wrong terminals it will damage the Servomotor.

Note 1. The External Regeneration Resistor can reach a temperature of approximately 120°C, so install it at a distance from heat-sensitive devices and wiring. In addition, a radiation shield must be installed according to the radiation conditions.

Note 2. For external dimensions, refer to *2-9 External Regeneration Resistor Specifications*.

■ External Regeneration Resistors

● Specifications

Model	Resistance	Nominal capacity	Regeneration absorption at 120°C	Heat radiation	Thermal switch output
R88D-RR22047S External Regeneration Resistor	47 Ω ± 5%	220 W	70 W	t1.0 × □350 (SPCC)	Operating temperature: 170°C NC contact

Note The following external regeneration resistors are recommended products from another manufacturer, Iwaki Musen Kenkyujo. For details, refer to the manufacturer's documentation.

RH120N50ΩJ 50 Ω ± 5% 30 W (Amount of regeneration at 120°C)
RH300N50ΩJ 50 Ω ± 5% 75 W (Amount of regeneration at 120°C)
RH500N50ΩJ 50 Ω ± 5% 100 W (Amount of regeneration at 120°C)

● Combining External Regeneration Resistors

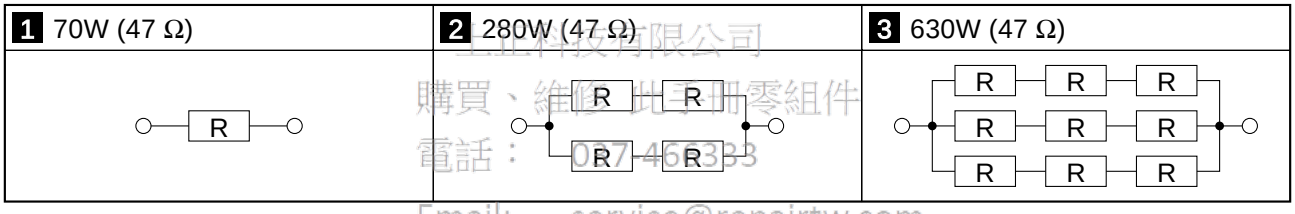

上正科技有限公司
購買、維修此型號零組件
電話： 07-466333
Email: service@repairtw.com
Line id: @2222
www.repairtw.com

Note A combination cannot be used if the resistance is less than the minimum connection resistance for any given Servo Driver. Refer to the following table for the minimum connection resistance values for each Servo Driver, and select a suitable combination.

■ Servo Driver Minimum Connection Resistance and External Regeneration Resistor Combinations

Servo Driver	Minimum Connection Resistance (Ω)	External Regeneration Resistor Combinations
R7D-AP04L	40	1, 2
R7D-AP04H	40	1, 2
R7D-AP08H	40	1, 2, 3

■ Wiring External Regeneration Resistance

● R7D-AP04L and R7D-AP04H

Connect an External Regeneration Resistor between the B1 and B2 terminals.

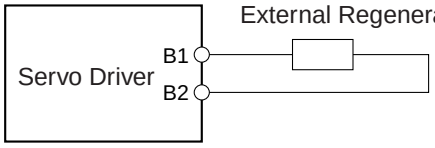

Note When using the R88A-RR22047S, connect the thermal switch output so that the power supply will be shut off when open.

● R7D-AP08H

Remove the short-circuit wiring between B2 and B2, and then connect an External Regeneration Resistor between the B1 and B2 terminals.

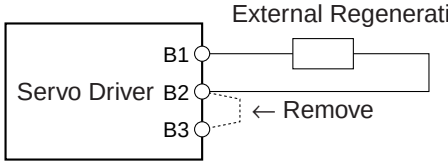

Note **1.** The short-circuit wiring between B2 and B3 must be removed.

2. When using the R88A-RR22047S, connect the thermal switch output so that the power supply will be shut off when open.

上正科技有限公司
購買、維修 此手冊零組件
電話： 037-466333
Email: service@repairtw.com
Line id: @zzzz
www.repairtw.com

上正科技有限公司
購買、維修 此手冊零組件
電話： 037-466333
Email: service@repairtw.com
Line id: @[illegible]
www.repairtw.com

Chapter 4

Operation

4-1 Operational Procedure
4-2 Switch Settings
4-3 Preparing for Operation
4-4 Trial Operation
4-5 Gain Adjustments
4-6 User Parameters
4-7 Operating Functions

Precautions

⚠ **Caution** Confirm that there will be no effect on the equipment, and then perform a test operation. Not doing so may result in equipment damage.

⚠ **Caution** Check the newly set parameters and switches with their switches for proper execution before actually running them. Not doing so may result in equipment damage.

⚠ **Caution** Do not make any extreme adjustments or setting changes. Doing so may result in unstable operation and injury.

⚠ **Caution** Separate the Servomotor from the machine, check for proper operation, and then connect to the machine. Not doing so may cause injury.

⚠ **Caution** When an alarm occurs, remove the cause, reset the alarm after confirming safety, and then resume operation. Not doing so may result in injury.

⚠ **Caution** Do not use the built-in brake of the Servomotor for ordinary braking. Doing so may result in a malfunction.

上比科技有限公司
購買、維修 此手冊零組件
電話： 037-466333
Email: service@repairtw.com
Line id: @zzzz
www.repairtw.com

4-1 Operational Procedure

After mounting, wiring, and connecting a power supply, check the operation of the Servomotor and Servo Driver. This section describes operating methods using the Servo Driver's front panel switches only.

Note For operating and adjustment methods using an R7A-PR02A Parameter Unit, refer to the *Parameter Unit Operation Manual* (Cat. No. I534).

1. Mounting and installation

   Install the Servomotor and Servo Driver according to the installation conditions. (Do not connect the Servomotor to the mechanical system before checking the no-load operation.) Refer to *3-1 Installation Conditions*.

2. Wiring and connections

   Connect to power supply and peripheral devices. Specified installation and wiring requirements must be satisfied, particularly for models conforming to the EC Directives. Refer to *3-2 Wiring*.

3. Switch settings

   Make sure that the power supply is turned OFF, and set the Servo Driver's front panel switches. Refer to *4-2 Switch Settings*.

4. Preparing for operation

   After checking the necessary items, turn ON the Unit's power supply. Check to see whether there are any internal errors in the Servo Driver. Refer to *4-3 Preparing for Operation*.

5. Trial operation

   Firstly, check the Servomotor's no-load operation. Next, turn the power OFF then ON again, and connect the Servomotor to the mechanical system. Turn ON the power, and check to see whether protective functions such as emergency stop and operational limits are working reliably. Check operation at both low speed and high speed, with either no workpiece or a dummy workpiece. Refer to *4-4 Trial Operation*.

6. Adjustments

   Manually adjust the gain as required. Refer to *4-5 Gain Adjustments*.

7. Operation

   Operation can now begin. If any trouble should occur, refer to *5 Troubleshooting*.

上正科技有限公司
購買、維修 此手冊零組件
電話： 037-466333
Email: service@repairtw.com
Line id: @zzzz
www.repairtw.com

4-2 Switch Settings

With SMARTSTEP A-series Servo Drivers, operation settings can be performed simply by using the front panel switches. Set the switches appropriately according to the system configuration.

4-2-1 Switch Nomenclature and Functions

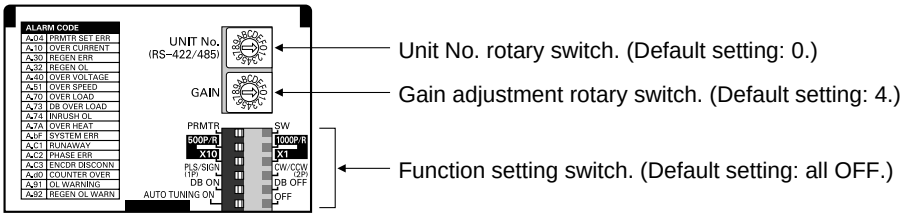

■ Unit No. Rotary Switch: UNIT No. (RS-422/485)

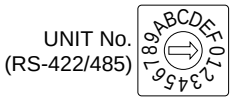

Use this switch to set the communications unit number for CN1 and CN3. When performing multiple-axis communications with multiple Servo Drivers from CN1 using, for example, a personal computer, set the rotary switch to a setting other than 0 (i.e., between 1 and F). Be sure not to use the same unit number more than once when performing multiple-axis communications. Attempting communications with duplicated unit numbers may result in damage to communications connectors.

上正科技有限公司
購買、維修、配件、手冊等諮詢
電話：037-466333
Email: service@repairtw.com
Line Id: @2222
www.repairtw.com

■ Gain Adjustment Rotary Switch: GAIN

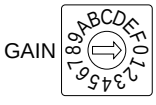

The gain adjustment rotary switch adjusts the response of the Servomotor. To reduce (slow down) the Servomotor's response, set the gain adjustment rotary switch to a low value. To increase (speed up) the Servomotor's response, set the gain adjustment rotary switch to a high value.

Note If the gain adjustment rotary switch is set to 0, the Servomotor will operate according to the Servo Driver's internal parameter.

■ Function Switches

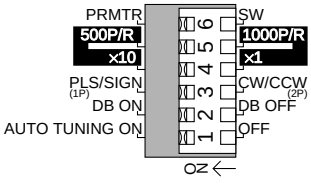

The function switches set Servo Driver functions.

Switch 6: Switches between switch and parameter settings.

Switches 5 and 4: Set the resolution.

Switch 3: Sets the command pulse input.

Switch 2: Sets the dynamic brake.

Switch 1: Switch to online autotuning.

Note Turn the power supply OFF before using switches 2 to 6.

■ Turning Function Switches ON and OFF

The default setting for all function switches is OFF. Use a thin-blade non-conductive ceramic screwdriver or equivalent to turn the switches ON and OFF. In the following diagrams, the left diagram shows a switch turned OFF, and the right diagram a switch turned ON.

Switch turned OFF

Switch turned ON

4-2-2 Setting Function Switches

■ Switch/Parameter Switch (Switch 6)

Switch 6 sets whether the Servo Driver is to be operated using the function switches, or using the parameter settings.

Switch 6	Switch/parameter switch
OFF	Function switches are enabled. (Enables switches 1 to 5.)
ON	Parameter settings are enabled.

上品科技有限公司
購買、維修 此手冊零組件
電話： 037-466333
Email: service@repairtw.com
Line Id: @2222
www.repairtw.com

Note Here, settings will be performed using the function switches, so turn OFF switch 6.

■ Resolution Setting (Switches 4 and 5)

Switches 4 and 5 set the positioning resolution. When they are set to 1,000 (the default setting), the Servomotor will rotate once for every 1,000 pulses that are input.

Switch 5	Switch 4	Resolution setting
OFF	OFF	1,000 pulses/rotation (0.36°/step)
OFF	ON	10,000 pulses/rotation (0.036°/step)
ON	OFF	500 pulses/rotation (0.72°/step)
ON	ON	5,000 pulses/rotation (0.072°/step)

Note At 5,000 pulses/rotation = 3,000 r/min at 250 kpps command pulses
At 10,000 pulses/rotation = 1,500 r/min at 250 kpps command pulses

■ Command Pulse Input Setting (Switch 3)

Switch 3 sets whether the command pulse input uses 2 pulses (forward (CCW) and reverse (CW) pulses) or a 1 pulse (feed pulse (PULS) and a forward/reverse signal (SIGN)).

Switch 3	Command pulse input setting
OFF	Forward pulse (CCW)/reverse pulse (CW) input (Positive logic)
ON	Feed pulse (PULS) forward/reverse signal (SIGN) input

Note Set according to the pulse output form of the Position Controller.

■ Dynamic Brake Setting (Switch 2)

Switch 2 sets dynamic brake operation. When dynamic braking is enabled, the Servomotor is stopped rapidly when the RUN command is turned OFF or when an alarm occurs.

Switch 2	Dynamic brake setting
OFF	Dynamic braking is disabled. (When the RUN command is turned OFF or when an alarm occurs, the Servomotor will coast to a stop.)
ON	Dynamic braking is enabled.

Note Regardless of the setting, when the main-circuit power supply or control-circuit power supply is turned OFF, dynamic braking will operate.

■ Online Autotuning Switch

The online autotuning switch function adjusts the gain automatically during operation.

Switch 1	Online autotuning switch
OFF	Ends online autotuning and stores the tuning results to the Servo Driver's internal inertia ratio parameter (Pn103).
ON	Executes online autotuning.

Note Operation of the online autotuning switch is described in *4-5 Gain Adjustments*.

上正科技有限公司
購買、維修 此手冊零組件
電話： 037-466333
Email: service@repairtw.com
Line id: @zzzz
www.repairtw.com

4-3 Preparing for Operation

This section explains the procedure following installation, wiring, and switch setting of the Servomotor and Servo Driver, to prepare the mechanical system for trial operation. It explains what you need to check both before and after turning ON the power.

4-3-1 Turning Power ON and Checking Indicators

■ Items to Check Before Turning ON the Power

● Checking Power Supply Voltage

• Check to be sure that the power supply voltage is within the ranges shown below.

R7D-AP□L (Single-phase 100-V AC input)

Main-circuit power supply: Single-phase 100/115 V AC (85 to 127 V) 50/60 Hz

Control-circuit power supply: Single-phase 100/115 V AC (85 to 127 V) 50/60 Hz

R7D-AP□H (Single-phase 200-V AC input)

Main-circuit power supply: Single-phase 200/230 V AC (170 to 253 V) 50/60 Hz

Control-circuit power supply: Single-phase 200/230 V AC (170 to 253 V) 50/60 Hz

R7D-AP08H (Three-phase input)

Main-circuit power supply: Three-phase 200/230 V AC (170 to 253 V) 50/60 Hz

Control-circuit power supply: Single-phase 200/230 V AC (170 to 253 V) 50/60 Hz

上正科技有限公司
購買 維修 此手冊零組件
電話： 037-466333
Email: service@repairtw.com
Line id: @repairtw
www.repairtw.com

● Checking Terminal Block Wiring

• The main-circuit power supply inputs (L1/L2 or L1/L2/L3) and the control-circuit power supply inputs (L1C/L2C) must be properly connected to the terminal block.

• The Servomotor's red (U), white (V), and blue (W) power lines and the yellow/green ground wire (⏚) must be properly connected to the terminal block.

● Checking the Servomotor

• There should be no load on the Servomotor. (Do not connect to the mechanical system.)

• The power lines at the Servomotor must be securely connected.

• The Encoder Cable must be securely connected to the Encoder Connector (CN2) at the Servo Driver.

• The Encoder Cable must be securely connected to the Encoder Connector at the Servomotor.

● Checking the Control Connectors

• The Control Cable must be securely connected to the I/O Control Connector (CN1).

• The RUN command (RUN) must be OFF.

■ Turning ON Power

- First carry out the preliminary checks, and then turn ON the control-circuit power supply. It makes no difference whether or not the main-circuit power supply is also turned ON.
- The $\overline{\text{ALM}}$ output will take approximately 2 seconds to turn ON after the power has been turned ON. Do not attempt to detect an alarm using the Host Controller during this time (when power is being supplied with the Host Controller connected).

■ Checking Displays

- When the power is turned ON, one of the codes shown below will appear on the alarm display.

Normal (with cylinder-style Servomotor connection)	Error (when Error A.C2 occurs)
C —Approx. 2 s→ –	A —Approx. 1 s→ C —Approx. 1 s→ 2 —Approx. 1 s→ □ —Approx. 1 s→ A → …

Note 1. When connecting a flat-style Servomotor, when the power is turned on P will be displayed, and after approximately two seconds "–" will be displayed. "–" shows that the servo is OFF. When the RUN command is input and the servo turns ON, the display will disappear.

Note 2. The alarm code (the number displayed when an error occurs) changes depending on the contents of the error.

- If an error (A.□□) is displayed when the power supply is turned ON, refer to *5 Troubleshooting* and apply the appropriate countermeasures.

上正科技有限公司
購買、維修、出租電腦零組件
電話： 037-466333
Email: service@repairtw.com
Line id: @zzzz
www.repairtw.com

4-4 Trial Operation

Once mounting, wiring, switch setting, and connecting a power supply have been finished and normal status has been confirmed, perform trial operation. The main purpose of trial operation is to confirm that the servo system is operating correctly electrically. First no-load operation and then loaded operation is checked.

Note 1. If an error occurs during the trial operation, refer to *5 Troubleshooting* to eliminate the cause. Then check for safety, reset the alarm, and then retry the trial operation.

Note 2. If the system vibrates due to improper gain adjustment, making it difficult to check operation, refer to *4-5 Gain Adjustments* and adjust the gain.

■ Preparing for Trial Operation

● Switch Settings

After turning OFF the power supply, set the following switches.

Gain adjustment rotary switch: Set to 1 (to prevent Servomotor vibration).

Online autotuning switch (function switch 6): Set to OFF.

上正科技有限公司
購買 維修 比手 備零組件
電話： 037-466333
Email: service@repairtw.com
Line Id: @zzzz
www.repairtw.com

● Turning OFF the Servomotor

Set up the system so that the power and the RUN command can be turned OFF so that the Servomotor can be immediately turned OFF if an abnormality occurs in the system.

■ Trial Operation

1. No-load Operation

- Turn ON the power supply to the control circuits, main circuits, and peripheral devices.
- Turn ON the RUN command.
- Check that Servomotor is ON.
- Send a command from the Host Controller to rotate the Servomotor and confirm that Servomotor rotation direction is correct and that the rotation speed and rotation amount match the command that was sent.

2. Power OFF, Mechanical Device Connection, Power ON

- Turn OFF the power supply.
- Connect the mechanical device to the Servomotor shaft.
- Turn ON the power supply.

3. Loaded Low-speed Operation

- Send a low-speed command from the Host Controller to rotate the Servomotor. (The definition of low speed varies depending on the mechanical system, but a rough estimate is 1/10 to 1/5 of the normal operating speed.)
- Check the following items.

  Is the emergency stop operating correctly?
  Are the limit switches operating correctly?
  Is the operating direction of the machinery correct?
  Are the operating sequences correct?
  Are there any abnormal sounds or vibration?
  Is any error (or alarm) generated?

Note 1. If anything abnormal occurs, refer to *5 Troubleshooting* and apply the appropriate countermeasures.

Note 2. If the system vibrates due to insufficient gain adjustment, making it difficult to check the operation, refer to *4-5 Gain Adjustments*, and adjust the gain.

4. Operation under Actual Conditions

- Operate the Servomotor in a regular pattern and check the following items.

  Is the operating speed correct? (Use the speed feedback monitor.)
  Is the load torque roughly equivalent to the measured value? (Use the torque command monitor and the accumulated load monitor.)
  Are the positioning points correct?
  When an operation is repeated, is there any discrepancy in positioning?
  Are there any abnormal sounds or vibration?
  Is either the Servomotor or the Servo Driver abnormally overheating?
  Is any error (or alarm) generated?

上正科技有限公司
購買、維修 此手冊零組件
電話： 037-466333
Email: service@repairtw.com
Line id: @zzzz
www.repairtw.com

Note 1. If anything abnormal occurs, refer to *5 Troubleshooting* and apply the appropriate countermeasures.

Note 2. If the system vibrates due to improper gain adjustment, making it difficult to check operation, refer to *4-5 Gain Adjustments* and adjust the gain.

5. Completing the Trial Operation

- Performing the above procedures completes the trial operation. Next, adjust the gain to improve command efficiency. (Refer to *4-5 Gain Adjustments* for details.)

4-5 Gain Adjustments

The SMARTSTEP A-series Servo Driver is equipped with an online autotuning function. Use this function to easily adjust the gain even if using a servo system for the first time.

4-5-1 Online Autotuning

■ What Is Online Autotuning?

- Online autotuning is a control function that measures the driver's load inertia during operation, and attempts to maintain the target speed loop gain and position loop gain.

Note Autotuning is disabled in the following cases. In these cases or if online autotuning does not operating properly during autotuning procedures, do not use online autotuning but adjust using only the gain adjustment rotary switch. (Refer to *4-5-2 Manual Tuning*.)

- When the load inertia fluctuates below 200 ms
- When the rotation speed does not exceed 500 r/min, or when the output torque does not exceed 50% of the rated torque
- When an external force is always imposed, such as with a vertical axis
- When the load rigidity is low, or when the adhesive friction is high

上正科技有限公司
購買、維修 此手冊零組件
電話： 037-466333
Email: service@repairtw.com
Line id: @zzzz
www.repairtw.com

■ Online Autotuning Procedure

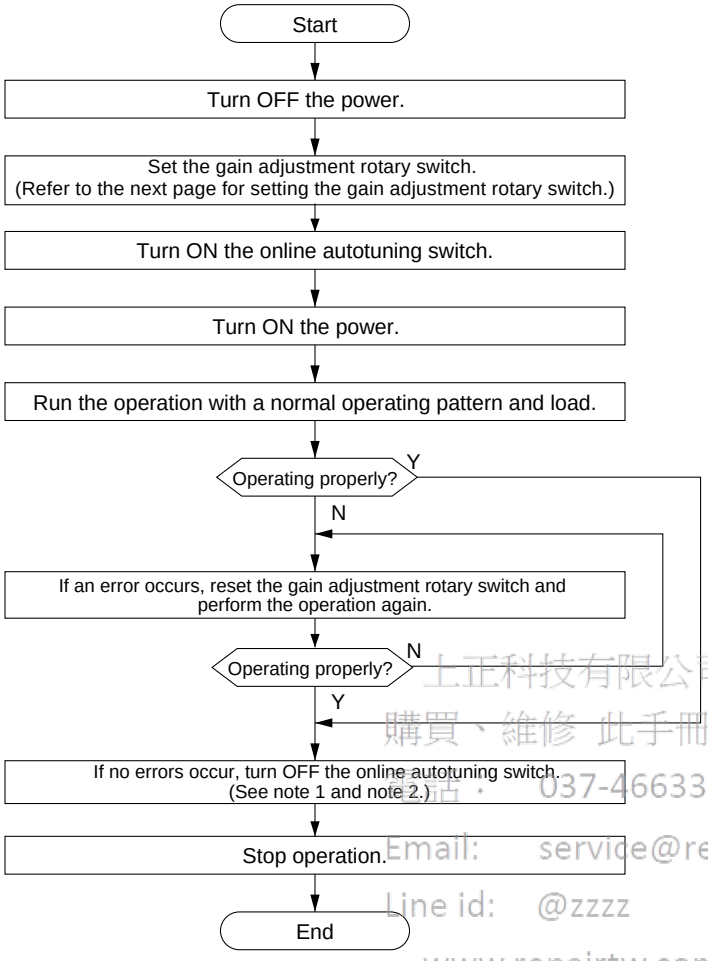

Do not perform extreme adjustment and setting changes as they may destablize the operation. Adjust the gain a little at a time while checking the Servomotor operation.

上正科技有限公司
購買、維修 此手冊零組件
電話： 037-466333
Email: service@repairtw.com
Line id: @zzzz
www.repairtw.com

Note 1. When the online autotuning switch is turned OFF, the tuning results will be stored in parameter Pn103 (inertia ratio). Operation from this point will run according to the value stored in Pn103.

Note 2. If the online autotuning switch is set to always ON, the Servomotor may become unstable due to extreme vibration when the load fluctuates. It is recommended that you perform online autotuning once, write the results (inertia ratio) to the user parameter, then operate with the online autotuning turned OFF.

■ Setting the Gain Adjustment Rotary Switch during Online Autotuning

- Setting the gain adjustment rotary switch during online autotuning sets the servo system's target speed loop gain and position loop gain.
- Select a switch setting from the following 10 levels (switches A to F are the same setting) to suit the mechanical system.

Response	Switch setting	Position loop gain (s^{-1})	Speed loop gain (Hz)	Speed loop integral time constant (×0.01 ms)	Torque command filter time constant (×0.01 ms)	Typical applications (mechanical system)
Low	1	15	15	4,000	250	Articulated robots, harmonic drives, chain drives, belt drives, rack and pinion drives, etc.
	2	20	20	3,500	200	
	3	30	30	3,000	150	
Medium	4	40	40	2,000	100	XY tables, orthogonal robots, general-purpose mechanical systems, etc.
High	5	60	60	1,500	70	Ball screws (direct couplings), feeders, etc.
	6	85	85	1,000	50	
	7	120	120	800	30	
	8	160	160	600	20	
	9	200	200	500	15	
	A	250	250	400	10	
	B	250	250	400	10	
	C	250	250	400	10	
	D	250	250	400	10	
	E	250	250	400	10	
	F	250	250	400	10	

上正科技有限公司
購買 維修 此手冊零組件
電話：037-466335
Email: service@repairtw.com
Line id: @zzzz
www.repairtw.com

Note The servo system loop gain will increase in response to a higher switch setting value, shortening positioning time. If the setting is too large, however, the machinery may vibrate. Reduce the setting if vibration is a problem.

4-5-2 Manual Tuning

■ Manually Tuning

- If online autotuning operations are not effective, tune the system using only the gain adjustment rotary switch.
  - When the load inertia fluctuates below 200 ms or less
  - When the rotation speed does not exceed 500 r/min, or when the output torque does not exceed 50% of the rated torque
  - When an external force is always imposed, such as with a vertical axis
  - When the load rigidity is low, or when the adhesive friction is high

■ Manual Tuning Procedure

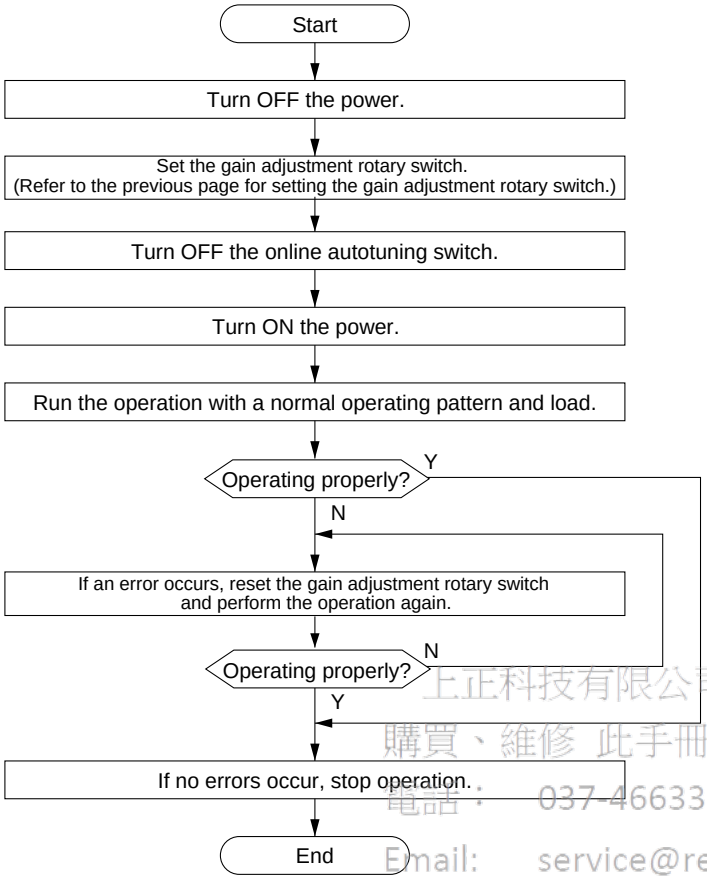

> ⚠ Do not perform extreme adjustment and setting changes as they may destablize the operation. Adjust the gain a little at a time while checking the Servomotor operation.

上正科技有限公司
購買、維修 此手冊零組件
電話： 037-466333
Email: service@repairtw.com
Line id: @zzzz
www.repairtw.com

4-6 User Parameters

This section describes the Servo Driver internal user parameters. Even if operating using the Servo Driver's front panel switch settings, be sure to understand the kinds of functions that are set with the parameters.

Note R7A-PR02A Parameter Unit is required to change user parameters. Refer to *Operation Manual* (I534) for detailed operation procedures.

4-6-1 Parameter Tables

- The parameters for which each digit number must be set separately are given with the digit number added to the parameter number. For example, Pn001.0 (i.e., digit 0 of parameter Pn001).
- The default setting for parameters set using 5 digits are given in the table without leading zeros (e.g., if the default setting is 00080, 80 is given in the table).

Parameter No.	Parameter name	Description for parameters set with 5 digits				Default	Unit	Setting range	Restart?
		Digit No.	Name	Setting	Description for parameters with individually set digits				
Pn000	Basic switches 1	0	Reverse rotation mode	0	CCW direction is taken for positive command.	0010	–	–	Yes
				1	CW direction is taken for positive command.				
		1	Control mode selection	1	Position control by pulse train command				
		2	Not used.	0	–				
		3	Not used.	0	–				
Pn001	Basic switches 2	0	Stop selection if an alarm occurs when servo is OFF	0	Servomotor stopped by dynamic brake.	1002	–	–	Yes
				1	Servomotor stopped by dynamic brake. Dynamic brake released after Servomotor stops.				
				2	Servomotor stopped with free run.				
		1	Not used.	0	–				
		2	Not used.	0	–				
		3	Not used.	1	–				
Pn100	Speed loop gain	Speed loop response adjustment				80	Hz	1 to 2000	–
Pn101	Speed loop integral time constant	Speed loop integral time constant				2000	×0.01 ms	15 to 51200	–
Pn102	Position loop gain	Adjusts position loop responsiveness.				40	1/s	1 to 2000	–
Pn103	Inertia ratio	The ratio between the machine system inertia and the Servomotor rotor inertia				300	%	0 to 10000	–
Pn109	Feed-forward amount	Position control feed-forward compensation				0	%	0 to 100	–
Pn10A	Feed-forward command filter	The position control feed-forward command filter				0	×0.01 ms	0 to 6400	–

上正科技有限公司
購買、維修各品牌伺服馬達零組件
電話：03-3000033
Email: service@repairtw.com
Line id: @rzzz
www.repairtw.com

Parameter No.	Parameter name	Description for parameters set with 5 digits				Default	Unit	Setting range	Restart?
		Digit No.	Name	Setting	Description for parameters with individually set digits				
Pn110	Online autotuning setting	0	Online autotuning selection	0	Autotunes initial operations only after power is turned ON.	0012	–	–	Yes The power supply does not need to be restarted. for Pn110.2.
				1	Always autotunes.				
				2	No autotuning				
		1	Not used.	1	–				
		2	Adhesive friction compensation selection	0	Friction compensation: OFF				
				1	Friction compensation: Rated torque ratio small				
				2	Friction compensation: Rated torque ratio large				
		3	Not used.	0	–				
Pn200	Position control setting 1	0	Command pulse mode	0	Feed pulse forward and reverse signal, positive logic	1011	–	–	Yes
				1	Forward pulse and reverse pulse, positive logic				
				2	90° phase difference (phase A/B) signal (×1), positive logic				
				3	90° phase difference (phase A/B) signal (×2), positive logic				
				4	90° phase difference (phase A/B) signal (×4), positive logic				
				5	Feed pulses forward and reverse signal, negative logic				
				6	Forward pulse and reverse pulse, negative logic				
				7	90° phase difference (phase A/B) signal (×1), negative logic				
				8	90° phase difference (phase A/B) signal (×2), negative logic				
				9	90° phase difference (phase A/B) signal (×4), negative logic				
		1	Deviation counter reset	0	Signal high level				
				1	Rising edge (low to high)				
				2	Signal low level				
				3	Falling signal (high to low)				
		2	Deviation counter reset for alarms and when servo is turned OFF	0	Deviation counter reset when an alarm occurs and when Servomotor is OFF.				
				1	Deviation counter not reset when an alarm occurs nor when Servomotor is OFF.				
				2	Deviation counter reset only when an alarm occurs.				
		3	Not used.	1	–				
Pn202	Electronic gear ratio G1 (numerator)	The pulse rate for the command pulses and Servo Servomotor travel distance 0.01 ≤ G1/G2 ≤ 100				4	–	1 to 65535	Yes
Pn203	Electronic gear ratio G2 (denominator)					1	–	1 to 65535	Yes
Pn204	Position command filter time constant 1 (primary filter)	Soft start setting for command pulses (Soft start characteristics are for the primary filter.)				0	×0.01 ms	0 to 6400	–
Pn207	Position control setting 2	0	Selects position command filter.	0	Primary filter (Pn204)	0000	–	–	Yes
				1	Linear acceleration and deceleration (Pn208)				
		1 to 3	Not used.	0	–				
Pn208	Position command filter time constant 2 (Linear acceleration and deceleration)	Soft start setting for command pulses (Soft start characteristics are for the linear acceleration and deceleration.)				0	×0.01 ms	0 to 6400	Yes
Pn304	Jog speed	Rotation speed during jog operation				500	r/min	0 to 10000	–
Pn401	Torque command filter time constant	The constant when filtering the internal torque command				40	×0.01 ms	0 to 65535	–

上正科技有限公司
購買、維修、特殊零組件
電話：03-[illegible]
Email: service@repairtw.com
Line id: @[illegible]
www.repairtw.com

Parameter No.	Parameter name	Description for parameters set with 5 digits				Default	Unit	Setting range	Restart?
		Digit No.	Name	Setting	Description for parameters with individually set digits				
Pn402	Forward torque limit	Forward rotation output torque limit (rated torque ratio)				350	%	0 to 800	–
Pn403	Reverse torque limit	Reverse rotation output torque limit (rated torque ratio)				350	%	0 to 800	–
Pn500	Positioning completed range	The range of positioning completed output (INP)				3	Command units	0 to 250	–
Pn505	Deviation counter overflow level	The detection level for a deviation counter overflow alarm				1024	×256 command units	1 to 32767	–
Pn600	Regeneration resistor capacity	Setting for regeneration resistance load ratio monitoring calculations Note: If using an External Regeneration Resistor, set the regeneration capacity for when the temperature rises above 120°C. If not using an External Regeneration Resistor, set Pn600 to 0.				0	×10 W	From 0 (Varies by Unit.)	–

4-6-2 Parameter Details

Pn000.0	Basic switches 1 – Reverse rotation mode						
Settings	0, 1	**Unit**	---	**Default**	0	**Restart?**	Yes

Setting Explanation

Setting	Explanation
0	CCW direction is taken for positive command (counterclockwise seen from the Servomotor output shaft)
1	CW direction is taken for positive command (clockwise seen from the Servomotor output shaft)

• This parameter sets the Servomotor's direction of rotation.

Email: service@repairtw.com
Line id: @zzzz
www.repairtw.com

Pn001.0	Basic switches 2 – Stop selection for alarm and servo OFF						
Settings	0 to 2	**Unit**	---	**Default**	2	**Restart?**	Yes

Setting Explanation

Setting	Explanation
0	Stop Servomotor using dynamic brake, dynamic brake stays ON after Servomotor has stopped.
1	Stop Servomotor using dynamic brake, dynamic brake released after Servomotor has stopped.
2	Stop Servomotor using free run.

• Select the stopping method for when the servo is turned OFF or an alarm occurs.

Note 1. If function switch 6 is OFF to enable the function switch settings, this parameter is ignored and the setting on function switch 2 (dynamic brake setting) is used.

Note 2. If the parameter is set to 0 or 1 and the Servomotor is turned by an external force to 20 r/min or faster after the dynamic brake has stopped the Servomotor, the Servo ON status will not be entered even if the RUN signal turns ON.

Note 3. The dynamic brake will operate when the main circuit power supply or the control power supply is OFF regardless of the setting of this parameter.

Pn100	Speed loop gain						
Settings	1 to 2000	**Unit**	Hz	**Default**	80	**Restart?**	---

- This gain adjusts the speed loop response.
- Increase the setting (i.e., increase the gain) to increase servo rigidity. Generally, the greater the inertia ratio, the higher the setting. There is a risk of vibration, however, if the gain is too high.

When the speed loop gain is manipulated, the response will change as shown in the following diagram.

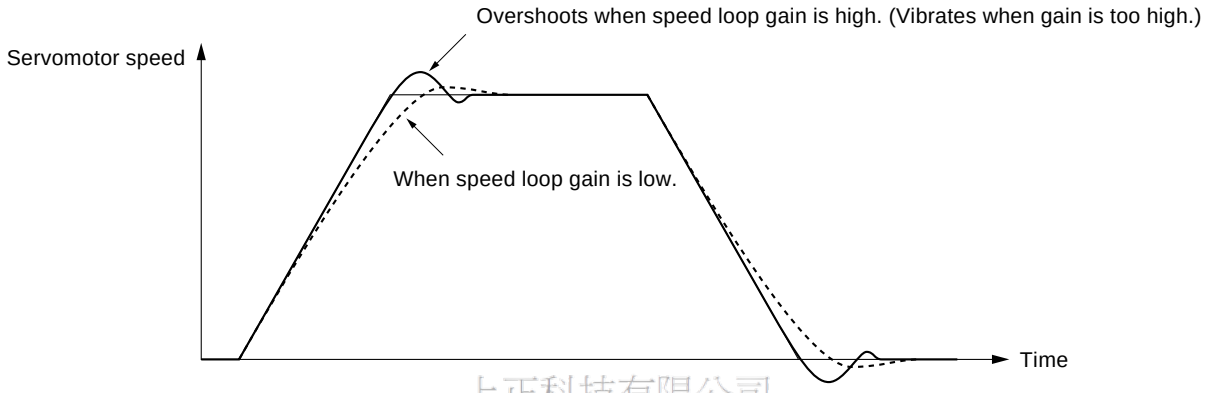

上正科技有限公司
購買、維修 此手冊零組件
電話： 037-466333
Email: service@repairtw.com
Line id: @zzzz
www.repairtw.com

Note This parameter is enabled only if the gain adjustment rotary switch is set to 0.

Pn101	Speed loop integral time constant						
Settings	15 to 51200	**Unit**	×0.01 ms	**Default**	2000	**Restart?**	---

- Sets the speed loop integral time constant.
- The higher the setting, the lower the response, and the lower the resilience to external force. There is a risk of vibration if the setting is too low.

When the speed loop integral time constant is manipulated, the response changes as shown in the following diagram.

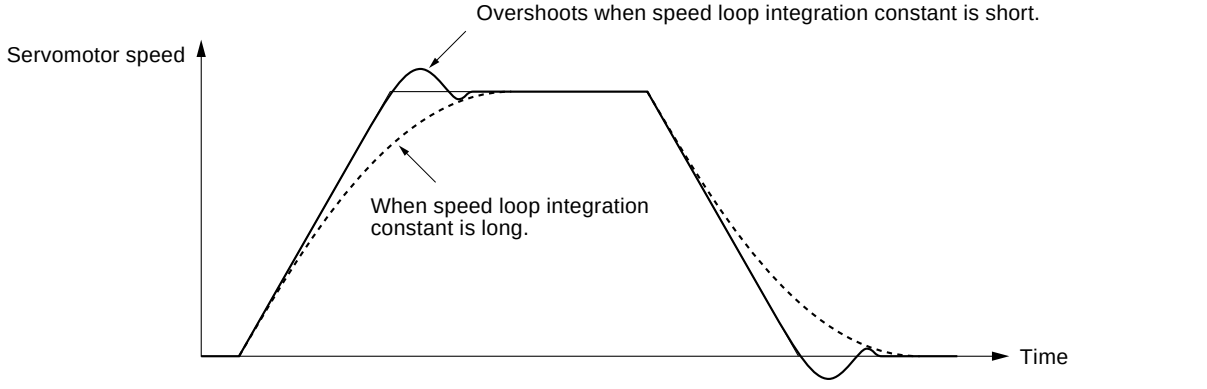

Note This parameter is enabled only if the gain adjustment rotary switch has been set to 0.

Pn102	**Position loop gain**						
Settings	1 to 2000	**Unit**	1/s	**Default**	40	**Restart?**	---

- Adjust the position loop response to suit the mechanical rigidity of the system.
- Servo system response is determined by the position loop gain. Servo systems with a high loop gain have a high response, and positioning is fast. To increase the position loop gain, you must improve mechanical rigidity and increase the specific oscillation. This should be 50 to 70 (1/s) for ordinary machine tools, 30 to 50 (1/s) for general-use and assembly machines, and 10 to 30 (1/s) for production robots. The default position loop gain is 40 (1/s), so be sure to lower the setting for machines with low rigidity.
- Raising the position loop gain in systems with low mechanical rigidity or systems with low specific oscillation may result in machine resonance, causing an overload alarm to occur.
- If the position loop gain is low, you can shorten the positioning time using feed forward. You can also shorten the positioning time using the bias function.
- Position loop gain is generally expressed as follows.

$$\text{Position loop gain (Kp)} = \frac{\text{Command pulse frequency (pulses/s)}}{\text{Deviation counter residual pulses (pulses)}} \text{ (1/s)}$$

When the position loop gain is manipulated, the response is as shown in the following diagram.

上正科技有限公司
購買 維修 此手冊零組件
電話： 037-466333
Email: service@repairtw.com
Line id: @zzzz
www.repairtw.com

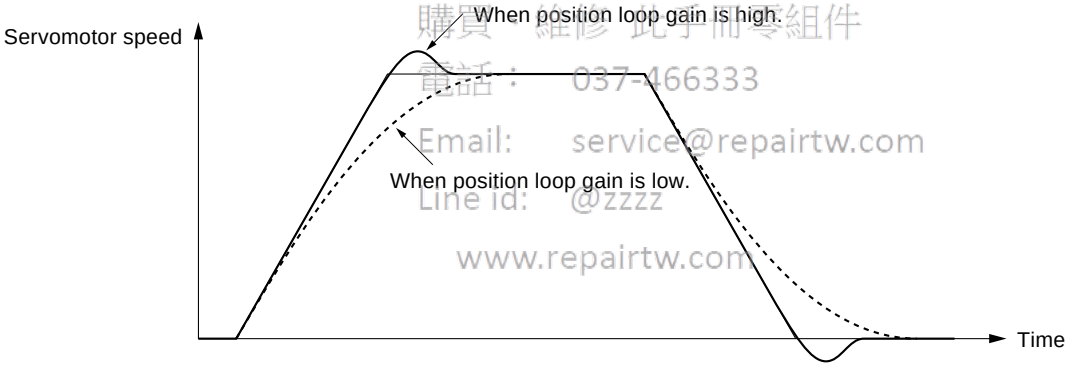

Note This parameter is enabled only if the gain adjustment rotary switch has been set to 0.

Pn103	**Inertia ratio**						
Settings	0 to 10000	**Unit**	%	**Default**	300	**Restart?**	---

- Set the mechanical system inertia (load inertia for Servomotor shaft conversion) using the ratio (%) of the Servomotor rotor inertia. If the inertia ratio is set incorrectly, Pn100 (speed loop gain) will also be incorrect.
- This parameter is the initial online autotuning value. After performing online autotuning, the correct value will be written to Pn103 if the tuning results are saved. Refer to *4-5-1 Online Autotuning* for details.

Pn109	**Feed-forward amount**						
Settings	0 to 100	**Unit**	%	**Default**	0	**Restart?**	---

- Sets the feed-forward compensation value during positioning.
- When performing feed-forward compensation, the effective servo gain increases, improving responsiveness. There is almost no effect, however, on systems where the position loop gain is sufficiently high.
- Use this parameter to shorten positioning time.

Note Setting a high value may result in machine vibration. Set the feed-forward amount for general machinery to 80% maximum. (Check and adjust machine response.)

Pn10A	**Feed-forward command filter**						
Settings	0 to 6400	**Unit**	×0.01 ms	**Default**	0	**Restart?**	---

- Sets the feed-forward primary (lag) command filter during position control.
- If the positioning completed signal is interrupted (i.e., repeatedly turns ON and OFF) because of performing feed-forward compensation, and speed overshooting is generated, solve the problem by setting the primary lag filter.

上正科技有限公司
購買、維修 此手冊零組件
電話： 037-466333
Email: service@repairtw.com
Line id: @zz
www.repairtw.com

Pn110.0	**Online autotuning setting – Online autotuning selection**						
Settings	0 to 2	**Unit**	---	**Default**	2	**Restart?**	Yes

Setting Explanation

Setting	Explanation
0	After the power is turned ON, autotuning is only performed for the initial operation.
1	Autotuning is always performed.
2	Autotuning is not used.

- Select the autotuning function you want to use.
- 0: After the power is turned ON, execute autotuning and, when the load inertia calculations are complete, use the data for control. Thereafter, do not perform autotuning again whenever the power is turned ON. Make this setting if load inertia fluctuation is small.
- 1: Constantly refresh the load inertia calculation data and constantly store the responses. Make this setting if load inertia fluctuates constantly.
- 2: Do not execute autotuning. (This setting is recommended for general operation.)

Note If function switch 6 is OFF to enable the function switch settings, this parameter is ignored and the setting on function switch 1 (online autotuning setting) is used.

Pn110.2	Online autotuning function – Adhesive friction compensation selection						
Settings	0 to 2	**Unit**	---	**Default**	0	**Restart?**	---

Setting Explanation

Setting	Explanation
0	No friction compensation (when adhesive friction for rated revolutions is 10% max. of rated torque)
1	Small ratio between friction compensation and rated torque (when adhesive friction for rated rotation speed is 10% to 30% of rated torque)
2	Large ratio between friction compensation and rated torque (when adhesive friction for rated rotation speed is 30% to 50% of rated torque)

- When calculating load inertia using online autotuning, set whether the effects of adhesive friction (load torque proportional to rotation speed) on the servo system should be considered.
- If adhesive friction is to be considered, set whether the adhesive friction is large or small to improve the accuracy of the load inertia calculations.

Note If the adhesive friction on the rated rotation speed is 10% max. of the rated torque, set this parameter to 0 (no friction compensation).

上正科技有限公司
購買、維修 此主機零組件
電話： 037-466333
Email: service@apanew.com
Line Id: @73333
www.apanew.com

Pn200	Position control setting 1 –- Command Pulse Mode (Position)						
Settings	0 to 9	**Unit**	---	**Default**	1	**Restart?**	Yes

Setting Explanation

Setting	Explanation
0	Feed pulse/forward signal, positive logic
1	Forward pulse/reverse pulse, positive logic
2	90° phase difference (phase A/B) signal (×1), positive logic
3	90° phase difference (phase A/B) signal (×2), positive logic
4	90° phase difference (phase A/B) signal (×4), positive logic
5	Feed pulses/Forward/reverse signal, negative logic
6	Forward pulse/reverse pulse, negative logic
7	90° phase difference (phase A/B) signal (×1), negative logic
8	90° phase difference (phase A/B) signal (×2), negative logic
9	90° phase difference (phase A/B) signal (×4), negative logic

- If using position control, select the command pulse mode to suit the Host Controller's command pulse format.
- If inputting 90° phase difference signals, select either ×1, ×2, or ×4. If you select ×4, the input pulse will be multiplied by 4, so the number of Servomotor rotations (speed and angle) will be four times that of the ×1 selection.

Note If function switch 6 is OFF to enable the function switch settings, this parameter is ignored and the setting on function switch 3 (command pulse input setting) is used.

Pn200.1	**Position control setting 1 – Deviation counter reset**						
Settings	0 to 3	**Unit**	---	**Default**	1	**Restart?**	Yes

Setting Explanation

Setting	Explanation
0	Reset deviation counter on signal high level (status signal).
1	Reset deviation counter on rising edge (Low to High).
2	Reset deviation counter on signal low level (status signal).
3	Reset deviation counter on falling signal (High to Low).

- Sets input conditions under which ECRST (deviation counter reset input, CN1-5: +ECRST, CN1-6: –ECRST) is effective.
- If using an OMRON Position Control Unit, do not change the default setting.

Pn200.2	**Position control setting 1 –Deviation counter reset for servo OFF and alarms**						
Settings	0 to 2	**Unit**	---	**Default**	0	**Restart?**	Yes

Setting Explanation

Setting	Explanation
0	Reset deviation counter when servo goes OFF and when an alarm occurs.
1	Do not reset deviation counter when servo goes OFF and when an alarm occurs.
2	Reset deviation counter only when alarm occurs.

上正科技有限公司
購買、維修、此手冊咨詢中
電話：027-66233
Email: service@repairtw.com
Line id: @zzz
www.repairtw.com

- Sets whether the deviation counter will be reset when the servo goes OFF and when an alarm occurs.
- If the deviation counter is not reset (setting 1 or 2), the Servomotor will rotate only to the number of deviation counter residual pulses the next time the servo is turned ON,. Be careful, because the servo begins to operate as soon as the power is turned ON.

Pn202	**Electronic gear ratio G1 (numerator)**						
Settings	1 to 65535	**Unit**	---	**Default**	4	**Restart?**	Yes

Pn203	**Electronic gear ratio G2 (denominator)**						
Settings	1 to 65535	**Unit**	---	**Default**	1	**Restart?**	Yes

- Sets the command pulses and Servomotor travel distance pulse rate.
- When G1/G2 = 1, if an (encoder resolution × 4) pulse is input, the Servomotor will rotate once (the internal Servo Driver will operate at ×4).
- Set within the range 0.01 ≤ G1/G2 ≤ 100.

Note 1. Refer to *4-7-4 Electronic Gear Function* for details.

Note 2. If function switch 6 is OFF to enable the function switch settings, this parameter is ignored and the setting on function switches 4 and 5 (resolution setting) is used.

Pn204	**Position command filter time constant 1 (primary filter)**						
Settings	0 to 6400	**Unit**	×0.01 ms	**Default**	0	**Restart?**	---

- Sets the soft start for the command pulses. The soft start characteristic is for a primary filter (exponentiation function).

Note 1. The soft start characteristics also includes linear acceleration and deceleration. (Set the time constant using Pn208.) Select the filter you want to use using Pn207.0 (position command filter selection).

Note 2. Refer to *4-7-5 Position Command Filter Function* for details.

Pn207.0	**Position control setting 2 – Position command filter selection**						
Settings	0, 1	**Unit**	---	**Default**	0	**Restart?**	Yes

Setting Explanation

Setting	Explanation
0	Primary filter (Sets Pn204 properties.)
1	Linear acceleration and deceleration (Sets Pn208 properties.)

- Select the soft start for the command pulses properties.
- Select 0 to allocate the properties to Pn204 (position command filter time constant 1), and select 1 to allocate the properties to Pn208 (position command filter time constant 2).
- If not using the soft start function, set the property for the selected filter to 0.

Note Refer to *4-7-5 Position Command Filter Function* for details.

上海快川电子科技有限公司
销售、维修 日本安川系列
電話： 027-46622
Email: sales@sepatw.com
Line id: @zzzz
www.sepatw.com

Pn208	**Position command filter time constant 2 (trapezoidal acceleration and deceleration)**						
Settings	0 to 6400	**Unit**	×0.01 ms	**Default**	0	**Restart?**	Yes

- Sets the soft start for the command pulses. The soft start characteristic is for linear acceleration and deceleration.

Note 1. The soft start characteristics also include the primary filter (the time constant set by Pn204). Select the filter you want to use using Pn207.0 (position command filter selection).

Note 2. Refer to *4-7-5 Position Command Filter Function* for details.

Pn304	**Jog speed**						
Settings	0 to 10000	**Unit**	r/min	**Default**	500	**Restart?**	---

- Sets the speed for jogging.

Note 1. If a value that exceeds the maximum Servomotor rotation speed is set, the maximum Servomotor rotation speed will be used.

Note 2. Refer to the *Operation Manual* (Cat. No.: I534) for details on the jog operations.

Pn401	**Torque command filter time constant**						
Settings	0 to 65535	**Unit**	×0.01 ms	**Default**	40	**Restart?**	---

- Sets the (primary) filter time constant for the internal torque command.
- When the mechanical resonance frequency is within the response frequency of the servo loop, Servomotor vibration will occur. To prevent this from occurring, set the torque command filter time constant.

The relationship between the filter time constant and the cut-off frequency can be found by means of the following formula:

fc (Hz) = 1/2πT T: Filter time constant (s), fc: cut-off frequency

- Set the cut-off frequency to below the mechanical resonance frequency.

Pn402	**Forward torque limit**						
Settings	0 to 800	**Unit**	%	**Default**	350	**Restart?**	---

Pn403	**Reverse torque limit**						
Settings	0 to 800	**Unit**	%	**Default**	350	**Restart?**	---

- Set Pn402 (forward torque limit) and Pn403 (reverse torque limit) as a percentage (%) of the Servomotor rated torque.

Note Refer to *4-7-3 Torque Limiting* for details.

上正科技有限公司
購買、維修 此手冊零組件
電話： 037-466333
Email: service@repairtw.com
Line Id: @zzzz
www.repairtw.com

Pn500	**Positioning completed range**						
Settings	0 to 250	**Unit**	Command units	**Default**	3	**Restart?**	---

- Set the deviation counter to output INP (positioning completed output) during position control.
- INP turns ON when the deviation counter residual pulses reaches Pn500 or less.

Pn505	**Deviation counter overflow level**						
Settings	1 to 32767	**Unit**	×256 command units	**Default**	1024	**Restart**?	---

- Set the deviation counter overload alarm detection level during position control.
- The servo alarm is turned ON when the deviation counter residual pulse setting is exceeded.
- Set the deviation counter overflow level to the number of command units (2 to 3 revolutions) appropriate for the system and operating pattern.

Pn600	Regeneration resistor capacity						
Settings	0 to max. for model	Unit	×10W	Default	0	Restart?	---

- If using an External Regeneration Resistor or External Regeneration Resistance Unit, set the regeneration absorption capacity. Set the regeneration absorption capacity for when the temperature rises above 120°C, not the nominal capacity. (Refer to *3-3-3 Regenerative Energy Absorption by External Regeneration Resistance* for details.)
- Un00A (regeneration load monitor) calculations and detection of A.92 (regeneration overload warning) and A.32 (regeneration overload alarm) are based on Pn600.

Note If an External Regeneration Resistor or External Regeneration Resistance Unit is not connected, set Pn600 to 0.

上正科技有限公司
購買、維修 此手冊零組件
電話： 037-466333
Email: service@repairtw.com
Line id: @zzzz
www.repairtw.com

4-7 Operating Functions

4-7-1 Position Control

■ Functions

- Perform position control using the pulse train input from CN1-1,2 for CW and CN1-3,4 for CCW.
- The Servomotor rotates using the value of the pulse train input multiplied by the electronic gear ratio (Pn202, Pn203).

Note If function switch 6 is OFF to enable the function switch settings, this parameter is ignored and the setting on function switches 4 and 5 (resolution setting) is used.

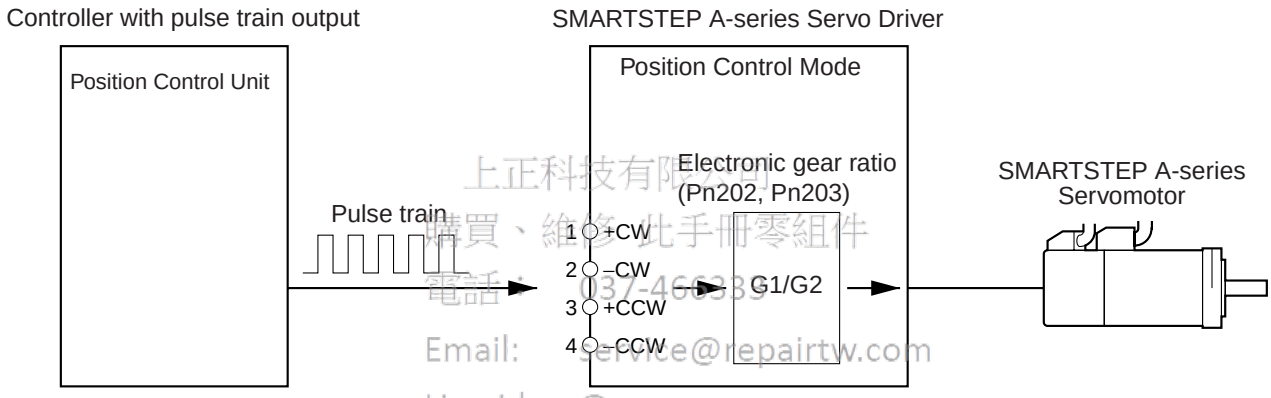

上正科技有限公司
購買、維修此手冊零組件
電話: 037-466333
Email: service@repairtw.com
Line id: @zzzz
www.repairtw.com

■ Settings

● Using Function Switches (Function Switch 6 Turned OFF)

Function switch	Explanation
Command pulse input setting (switch 3)	Set to match the Controller command pulse type.
Resolution setting (switches 4 and 5)	Set to 500, 1,000, 5,000, or 10,000.

● Using Parameters (Function Switch 6 Turned ON)

Parameter No.	Parameter name	Explanation
Pn200.0	Position control setting 1 Command pulse mode	Set to match the controller command pulse status.
Pn202	Electronic gear ratio G1 (numerator)	Set the pulse routes for the command pulse and Servomotor travel amount. 0.01 ≤ G1/G2 ≤ 100
Pn203	Electronic gear ratio G2 (denominator)	

4-7-2 Brake Interlock

■ Precautions for Using Electromagnetic Brake

- The electromagnetic brake Servomotor with a brake is a non-excitation brake especially for holding. If the brake is applied while the Servomotor is operating, the brake disk may become damaged or malfunction due to friction, causing damage to the Servomotor.

■ Function

- Outputs the BKIR (brake interlock) signal to turn ON and OFF the electromagnetic brake.

■ Operation

● RUN Timing (Servomotor Stopped)

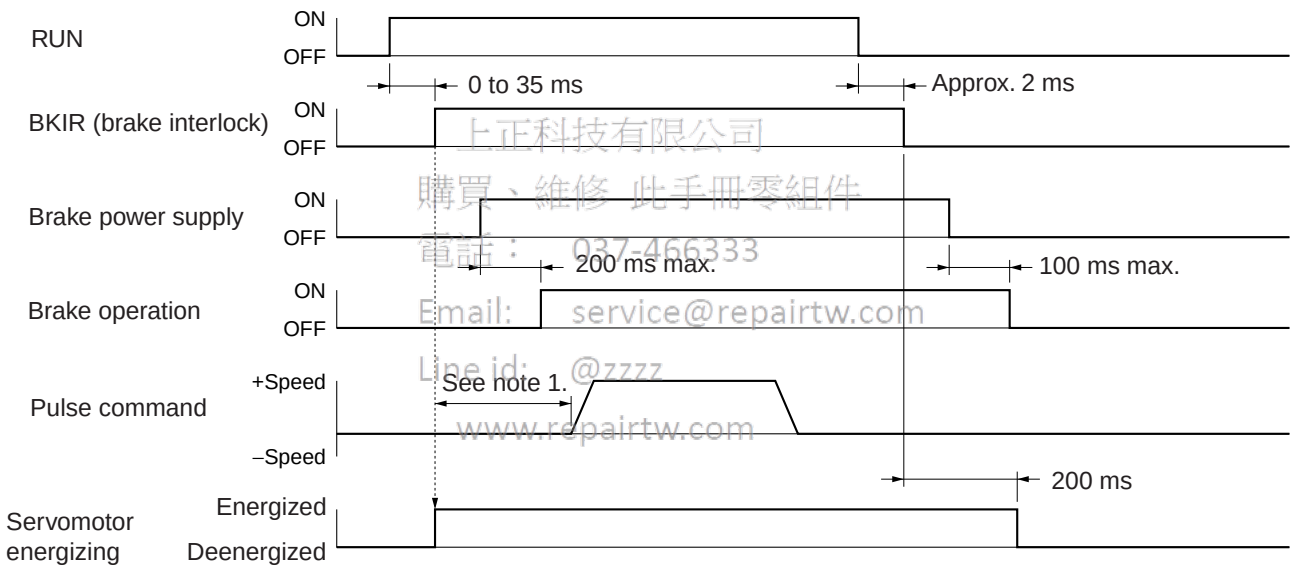

上正科技有限公司
購買、維修 此手冊零組件
電話： 037-466333
Email: service@repairtw.com
Line id: @zzzz
www.repairtw.com

Note 1. The time from turning ON the brake power supply to the brake being released is 200 ms max. Set the speed command (pulse command) to be given after the brake has been released, taking this delay into account.

Note 2. The time from turning OFF the brake power supply to the brake engaging is 100 ms max.

● Power Supply Timing (Servomotor Stopped)

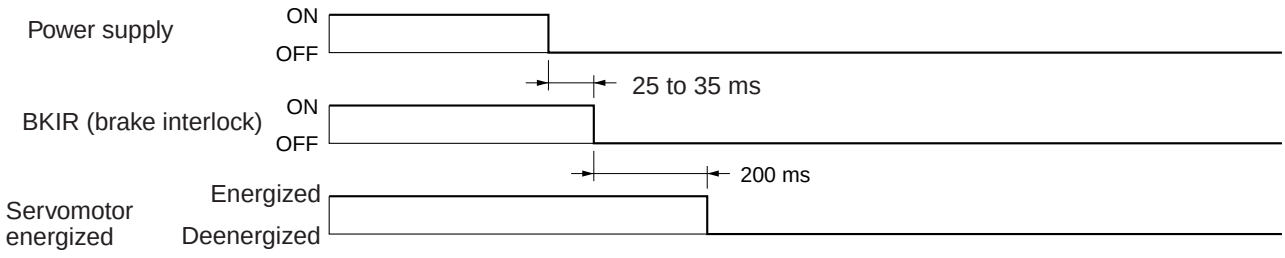

Note The time from turning OFF the brake power supply to the brake engaging is 100 ms max.

● RUN, Error, and Power Supply Timing (Servomotor Rotating)

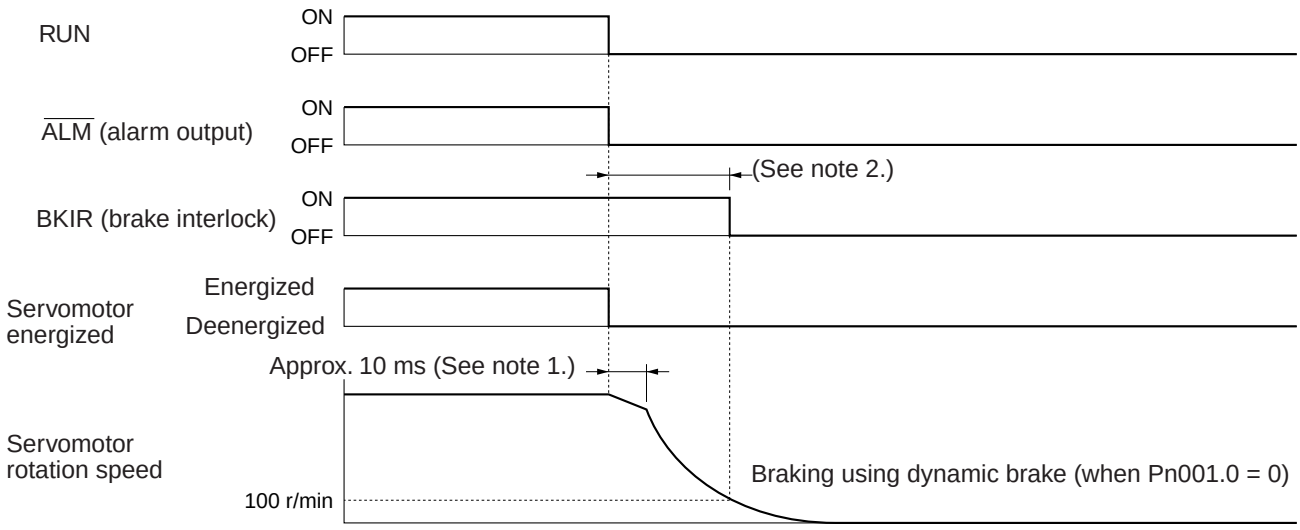

Note 1. During the approximately 10 ms from the Servomotor de-energizing to the dynamic brake being applied, the Servomotor will continue to rotate due to its momentum.

Note 2. If the Servomotor rotation speed falls below 100 r/min, the BKIR (brake interlock) signal is turned OFF.

上正科技有限公司
購買、維修 此手冊零組件
電話： 037-466333
Email: service@repairtw.com
Line id: @zzzz
www.repairtw.com

● Power Supply Timing (Servomotor Rotating)

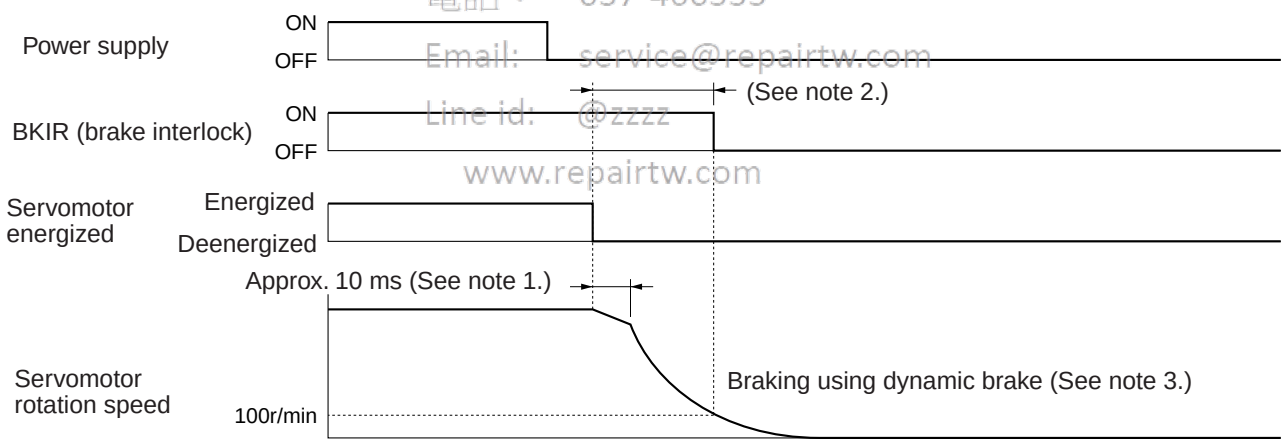

Note 1. During the approximately 10 ms from the Servomotor de-energizing to the dynamic brake being applied, the Servomotor will continue to rotate due to its momentum.

Note 2. If the Servomotor rotation speed falls below 100 r/min, the BKIR (brake interlock) signal is turned OFF.

Note 3. When the main-circuit power supply or control-circuit power supply is turned OFF, the Servomotor will be stopped using dynamic braking regardless of the setting of the parameter.

4-7-3 Torque Limiting

■ Functions

- The torque limit function limits the Servomotor's output torque.
- This function can be used to protect the Servomotor and mechanical system by preventing excessive force or torque on the mechanical system when the machine (moving part) pushes against the workpiece with a steady force, such as in a bending machine.
- The steady force applied during normal operation is limited with user parameters Pn402 (forward torque limit) and Pn403 (reverse torque limit).

■ Parameters Requiring Settings

● Limiting the Steady Force Applied during Normal Operation

Parameter No.	Parameter name	Explanation
Pn402	Forward torque limit	Set the output torque limit for the forward direction as a percentage of the rated torque (setting range: 0% to 800%).
Pn403	Reverse torque limit	Set the output torque limit for the reverse direction as a percentage of the rated torque (setting range: 0% to 800%).

Note 1. Set these parameters to 350 (the default setting) when the torque limit function is not being used.

Note 2. If the connected Servomotor is set to a value greater than the maximum momentary torque, the maximum momentary torque will become the set limit.

上揚機電公司
購買、維修、出租、租賃組件
電話： 037-466333
Email: service@repairtw.com
Line id: @zzzz
www.repairtw.com

4-7-4 Electronic Gear Function

■ Functions

- This function rotates the Servomotor for the number of pulses obtained by multiplying the command pulses by the electronic gear ratio.
- This function is enabled under the following conditions.

  When fine-tuning the position and speed of two lines that are to be synchronous.

  When using a position controller with a low command pulse frequency.

  When you want to set the travel distance for machinery per pulse to 0.01 mm, for example.

Note If function switch 6 is OFF to enable the function switch settings, this parameter is ignored and the setting on function switches 4 and 5 (resolution setting) is used.

■ Parameters Requiring Settings

Parameter No.	Parameter name	Explanation
Pn202	Electronic gear ratio G1 (numerator)	Set the pulse rate for the command pulse and Servomotor travel distance. When G1/G2 = 1, if the pulse (encoder resolution × 4) is input, the Servomotor will rotate once (i.e., the internal driver will rotate × 4). (See note 1.)
Pn203	Electronic gear ratio G2 (denominator)	

Note 1. Set within the range 0.01 ≤ G1/G2 ≤ 100.

Note 2. These parameters become effective when the power is turned ON again after having been turned OFF. (Check to see that the LED display has gone OFF.)

Note 3. With the default setting (G1/G2 = 4), the Servomotor will rotate once when 2,000 pulses are input.

Note 4. One position deviation (deviation counter) display and positioning completed range pulse make one input pulse. (This is called a command unit.)

■ Operation

• When set to G1/G2 = 8,000/1,000, operation is the same as for a 1,000-pulses/rotation Servomotor.

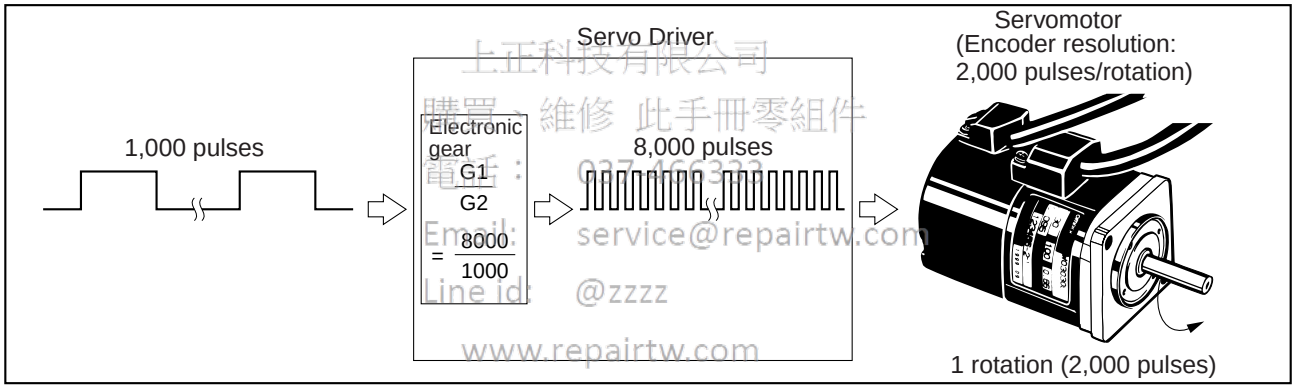

上正科技有限公司
購買、維修 此手冊零組件
電話： 037-466322
Email: service@repairtw.com
Line id: @zzzz
www.repairtw.com

4-7-5 Position Command Filter Function

■ Functions

- Perform soft start processing for the command pulses using the selected filter to gently accelerate and decelerate.
- Select the filter characteristics using Pn207.0 (position command filter selection).
- When Pn204 (position command filter time constant 1) is selected, acceleration and deceleration are performed using the primary filter (exponentiation function).
- When Pn208 (position command filter time constant 2) is selected, acceleration and deceleration are linear.
- This function is effective in the following cases:

  There is no acceleration/deceleration function in the command pulse (controller).

  The command pulse frequency changes rapidly, causing the machinery to vibrate during acceleration and deceleration.

  The electronic gear setting is high (G1/G2 ≥ 10).

■ Parameters Requiring Settings

上正科技有限公司
購買、維修、此手冊零組件
電話： 037-400333
Email: service@repairtw.com
Line id: @rrrr
www.repairtw.com

Parameter No.	Parameter name	Explanation
Pn207.0	Select position control filter	Select either primary filter (setting: 0), or linear acceleration and deceleration (setting: 1).
Pn204	Position control filter time constant 1 (primary filter)	Enabled when Pn207.0 = 0. Be sure to set the primary filter time constant (setting range = 0 to 6400 (× 0.01 ms)).
Pn208	Position control filter time constant 2 (linear acceleration and deceleration)	Enabled when Pn207.0 = 1. Be sure to set the acceleration and deceleration times (setting range = 0 to 6400 (× 0.01 ms)).

Note If not using the position command filter function, set each to 0 (i.e., the default setting).

■ Operation

- The characteristics for each filter are shown below.
- Servomotor acceleration and deceleration are delayed further than the characteristics shown below due to position loop gain delay.

  Acceleration: 2/Kp (s); Deceleration: 3/Kp (s); Kp: Position loop gain (Pn102)

● Primary Filter

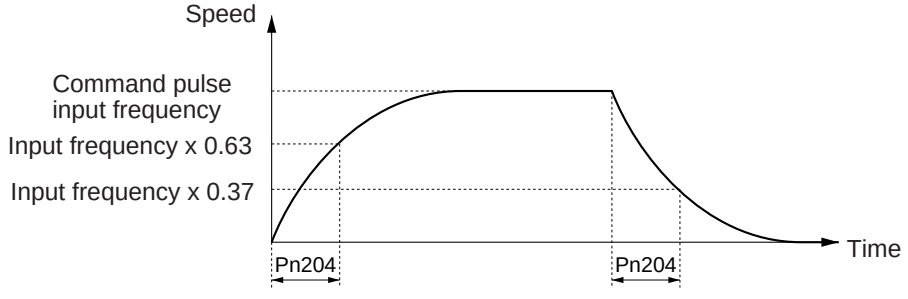

● **Linear Acceleration and Deceleration**

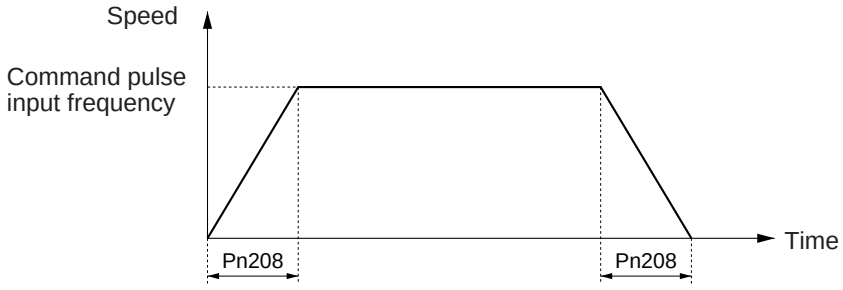

上正科技有限公司
購買、維修 此手冊零組件
電話： 037-466333
Email: service@repairtw.com
Line id: @zzzz
www.repairtw.com

上正科技有限公司
購買、維修 此手冊零組件
電話： 037-466333
Email: service@repairtw.com
Line id: @zzzz
www.repairtw.com

Chapter 5

Troubleshooting

5-1 Measures when Trouble Occurs
5-2 Alarms
5-3 Troubleshooting
5-4 Overload Characteristics (Electron Thermal Characteristics)
5-5 Periodic Maintenance

5-1 Measures when Trouble Occurs

5-1-1 Preventive Checks Before Trouble Occurs

This section explains the preventive checks and analysis tools required to determine the cause of troubles if they occurs.

■ Check the Power Supply Voltage

• Check the voltage to the power supply input terminals.

Main-circuit Power Supply Input Terminals (L1, L2, (L3))

R7D-AP□H: Single-phase 200/230 V AC (170 to 253 V) 50/60 Hz
Using R7D-AP08H with three-phase input: Three-phase 200/230 V AC (170 to 253 V) 50/60 Hz

R7D-AP□L: Single-phase 100/115 V AC (85 to 127 V) 50/60 Hz

Control-circuit Power Supply Input Terminals (L1C, L2C)

R7D-AP□H: Single-phase 200/230 V AC (170 to 253 V) 50/60 Hz

R7D-AP□L: Single-phase 100/115 V AC (85 to 127 V) 50/60 Hz

上正科技有限公司
購買、維修 此手冊零組件
電話： 037-466333
Email: service@repairtw.com
Line ID: @222
www.repairtw.com

If the voltage falls outside of this range, there is a risk of malfunction, so make sure that the power supply is correct.

• Make sure that the voltage of the sequence input power supply (+24 VIN Terminal (pin CN1-13)) is within the range 23 to 25 VDC. If the voltage falls outside of this range, there is a risk of malfunction, so make sure that the power supply is correct.

■ Selecting Analysis Tools

● Check Whether an Alarm Has Occurred

• If an alarm has occurred, check the alarm code (A.□□) and perform analysis depending on the alarm code.

• If an alarm has not occurred, perform analysis depending on the error.

Note Refer to *5-3 Troubleshooting* in either case.

● Types of Analysis Tools

• The types of analysis tools are as follows:

Servo Driver Indicators and Parameter Unit

• Perform analysis using the display (7-segment LED) on the front panel of the Servo Driver. Analysis can also be performed using the R7A-PR02A Parameter Unit's alarm history display function. This manual explains analysis using these methods.

Computer Monitor Software

- Install and use the SMARTSTEP A-series Servo Driver Computer Monitor Software for Windows version 2.0 (WMON Win Ver. 2.0) (Cat. No.: SBCE-011). The following three items are required: A Windows-compatible computer, the Computer Monitor Software, and a Connecting Cable (R7A-CCA002P□).
- Refer to the SMARTSTEP A-series Servo Driver Computer Monitor Software for operation details.

5-1-2 Precautions

When checking and verifying I/O after trouble has occurred, the Servo Driver may suddenly start to operate or suddenly stop, so take precautions. Also, do not attempt operations not specified in this manual.

■ Precautions

- Disconnect any cables before checking if they have burned out. Even if you have checked the conduction of the wiring, there is a risk of conduction due to the return circuit.
- If the encoder signal is lost, the Servomotor may run away, or an error may be generated. Make sure the Servomotor is disconnected from the mechanical system before checking the encoder signal.
- When performing tests, first check that there are no personnel inside the machine facilities, and that the facilities will not be damaged even if the Servomotor runs away. Also, check that even if the Servomotor runs away, you can immediately stop the machine using an emergency stop before performing the tests.

上揚科技有限公司
購買、維修、此手冊零組件
電話： 037-466333
Email: service@repairtw.com
Line id: @jzzzz
www.repairtw.com

5-1-3 Replacing the Servomotor and Servo Driver

Perform the following procedure to replace the Servomotor or Servo Driver.

■ Replacing the Servomotor

1. Replace the Servomotor.
2. Perform origin teaching.
   - When replacing the Servomotor, the Servomotor's specific origin position (Z-phase) may slip, so be sure to perform origin teaching.
   - Refer to the manual for the position controller you use for how to perform origin teaching.

■ Replacing the Servo Driver

1. Make a note of the parameters.
   - If using a Parameter Unit, transfer all of the parameter settings to the Parameter Unit using the Parameter Unit's copy function. You can also use the Parameter Unit and write down all of the parameter settings.
   - If using Computer Monitor Software, start the program, and transfer and save all the parameters in the Servo Driver to the computer.
2. Replace the Servo Driver.
3. Match the switch settings.
   - Set the new Servo Driver's switches (Unit No. selection rotary switch, gain adjustment rotary switch, and function switches) to match the old Servo Driver's switch settings.
4. Set the parameters.
   - If using a Parameter Unit, either use the Parameter Unit copy function to transfer the stored parameters to the Servo Driver and then confirm that the parameters have been transferred, or use the Parameter Unit to set all the parameters.
   - If not using Computer Monitor Software, set all the parameters using a Parameter Unit or Servo Driver operation keys.

上正科技有限公司
購買、維修 此手冊零組件
電話： 037-466333
Email: service@repairtw.com
Line id: @zzzz
www.repairtw.com

5-2 Alarms

If the Servo Driver detects an error, $\overline{\text{ALM}}$ (alarm output) will be output, the power drive circuit in the Servo Driver will turn OFF, and the alarm will be displayed. If the Servo Driver detects a warning (e.g., overload warning or regenerative overload warning), a warning code will be displayed, but operation will continue.)

Note 1. Refer to *5-3-1 Error Diagnosis Using Alarm Display* for appropriate alarm countermeasures.

Note 2. Cancel the alarm using one of the following methods.

- Input a RESET (alarm reset) signal.
- Turn OFF the power supply, then turn it ON again.
- Reset the alarm using the Parameter Unit keys.
  The following alarms can only be cancelled by turning OFF and ON the power supply: A.04, A.10, A.bF, A.C2, and A.C3.

Note 3. If an alarm is canceled while RUN is turned ON, the Servo Driver will start as soon as the alarm is cleared, which is dangerous. Be sure to turn OFF the RUN command before canceling the alarm.

上正科技有限公司
購買、維修 此手冊零組件
電話： 037-466333
Email: service@repairtw.com
Line id: @zzzz
www.repairtw.com

■ Servo Driver Alarm Display

If an error is detected, an alarm code will be displayed one segment at a time on the Servo Driver's front-panel alarm display, as shown in the following example.

Example: Alarm Code A.C2

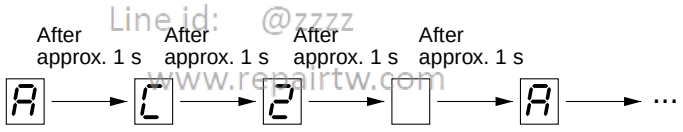

■ Alarm Table

	Code	ALM	Error detection function	Cause of error
Alarm	A.04	OFF	Parameter setting error	The Servomotor does not match the Servo Driver.
	A.10	OFF	Overcurrent	Overcurrent detected, or improper radiation shield temperature rise detected.
	A.30	OFF	Regeneration error	Regeneration circuit damaged due to large amount of regenerative energy.
	A.32	OFF	Regeneration overload	Regenerative energy exceeded the regeneration resistance.
	A.40	OFF	Overvoltage/undervoltage	Main circuit DC voltage outside the allowable range.
	A.51	OFF	Overspeed	Servomotor rotation speed exceeded the maximum speed.
	A.70	OFF	Overload	Output torque exceeded 120% of rated torque.
	A.73	OFF	Dynamic brake overload	Regenerative energy exceeded the dynamic brake resistance during dynamic brake operation.
	A.74	OFF	Inrush resistance overload	Inrush current exceeded the inrush resistance during power supply inrush.
	A.7A	OFF	Overheat	Abnormal temperature rise detected in radiation shield.
	A.bF	OFF	System error	A control circuit system error was detected.
	A.C1	OFF	Runaway detected	The Servomotor rotated in the opposite direction from the command.
	A.C2	OFF	Phase error detected	The Servomotor's electrical angle was incorrectly detected
	A.C3	OFF	Encoder disconnection detected	Encoder phase A, B, or S is disconnected or shorted.
	A.d0	OFF	Deviation counter overflow	Deviation counter's residual pulses exceeded the deviation counter overflow level set in Pn505.
	CPF00	---	Parameter Unit transmission error 1	Data could not be transmitted after the power supply was turned ON. (See note.)
	CPF01	---	Parameter Unit transmission error 2	Transmission timeout error (See note.)
Warning	A.91	---	Overload	A warning occurs before the overload alarm (A.70) is reached. An alarm may be generated if the Servomotor continues to operate.
	A.92	---	Regeneration overload	A warning occurs before the regeneration overload alarm (A.32) is reached. An alarm may be generated if the Servomotor continues to operate.

上正科技有限公司
購買、維修 此手冊零組件
電話： 037-466333
Email: service@repairtw.com
Line Id: @2222
www.repair.tw.com

Note These alarms are not displayed on the alarm indicator on the front of the Servo Driver. They appears on the display of the Parameter Unit.

5-3 Troubleshooting

If an error occurs in the machinery, check the type of error using the alarm indicators and operation status, verify the cause, and take appropriate countermeasures.

5-3-1 Error Diagnosis Using Alarm Display

Display	Error	Status when error occurs	Cause of error	Countermeasures
A.04	Parameter setting error	Occurs when control circuit power supply is turned ON.	A value outside of the setting range was previously set in the parameters.	Reset the parameters within the setting range.
			Control panel error	Replace the Servo Driver.
A.10	Overcurrent	Occurs when power supply is turned ON.	Control panel error Main circuit transistor module error	Replace the Servo Driver.
		Occurs when servo is turned ON.	Current feedback circuit error Main circuit transistor module error	Replace the Servo Driver.
			Servomotor power line is short-circuited or grounded between phases.	Repair the short-circuited or grounded wire. Measure the insulation resistance at the Servomotor and, if there is a short-circuit, replace the Servomotor.
			Miswiring between U-phase, V-phase, W-phase, and ground.	Correct the wiring.
			Servomotor winding is burned out.	Measure the winding resistance, and if the winding is burned out, replace the Servomotor.
			Operating above rated output.	Lighten the load.
A.30	Regeneration error	Occurs during operation.	Error in the regenerative circuit parts.	Replace the Servo Driver.
			External Regeneration Resistor is disconnected.	Replace the External Regeneration Resistor.
			There is a short-circuit missing between B2 and B3, but the external circuit resistor is not connected.	Correctly connect the external circuit resistor (between B1 and B2).
			Setting error in Pn600 (regeneration resistor capacity).	Set Pn600 correctly.

上正科技有限公司
購買、維修 II 手冊零組件
電話： 0975-0000
Email: service@repairtw.com
Line id: @zzzz
www.repairtw.com

Display	Error	Status when error occurs	Cause of error	Countermeasures
A.32	Regeneration overload	Occurs during operation.	Regenerative energy exceeds tolerance.	Calculate the regenerative energy, and connect an external Regeneration Resistor with the required regeneration absorption capacity.
			Setting error in Pn600 (regeneration resistor capacity)	Set Pn600 correctly.
			Main-circuit power supply voltage is outside tolerance range.	Change the main-circuit power supply voltage to within tolerance range.
A.40	Overvoltage	Occurs when power supply is turned ON.	Main circuit power supply voltage is outside tolerance range.	Change the main circuit power supply voltage to within tolerance range.
			Main-circuit power supply is damaged.	Replace the Servo Driver.
		Occurs when Servomotor is decelerating.	Load inertia is too great.	Deceleration time is too long. Calculate the regenerative energy, and connect an external Regeneration Resistor with the required regeneration absorption capacity.
			Main circuit power supply voltage exceeds tolerance range.	Reduce main circuit power supply voltage to within tolerance range.
		Occurs during descent (vertical axis)	Gravitational torque is too large.	Add a counterbalance to the machinery to lower gravitational torque. Slow the descent speed. Calculate the regenerative energy, and connect and external Regeneration Resistor with the required regeneration absorption capacity.
	Low voltage	Occurs when the control circuit power supply only is turned ON.	Control panel error	Replace the Servo Driver.
		Occurs when the main circuit power supply is turned ON.	Main circuit power supply voltage is outside tolerance range.	Change the main circuit power supply voltage to within tolerance range.
			Main circuit power supply is damaged.	Replace the Servo Driver.

上正科技有限公司
購買、維修、供手冊零組件
電話： 04-22466333
email: service@repairtw.com
Line id: @zzzz
www.repairtw.com

Display	Error	Status when error occurs	Cause of error	Countermeasures
A.51	Overspeed	Occurs when the servo is ON.	Encoder signal between controllers is wired incorrectly.	Rewire correctly.
			Servomotor power line is wired incorrectly.	Rewire correctly.
		Occurs along with high-speed rotation when a command is input.	Position command input exceeds 4,500 r/min.	Input command values correctly.
			Pn202 and Pn203 (electronic gear ratio) setting is too large.	Set the parameters correctly.
			Resolution setting switch (switches 4 and 5) setting is too low.	Reset the switches correctly.
			Rotation limit has been exceeded due to overshooting.	Adjust the gain. Lower the maximum specified speed.
A.70	Overload	Occurs during operation.	Running at over 120% of rated torque (effective torque).	Repair the Servomotor shaft if it is locked. If the Servomotor power line is wired incorrectly, rewire it correctly. Lighten the load. Lengthen the acceleration and deceleration times. Adjust the gain.
			Power supply voltage has fallen.	Check the power supply voltage, and lower to within tolerance range.
			Servomotor winding is burned out.	Check the winding resistance. Replace the Servomotor if the winding is burned out.
			Servo Driver is burned out.	Replace the Servo Driver.
A.73	Dynamic brake overload	Occurs when the servo is turned OFF after operating.	Energy required for stopping exceeds the dynamic brake resistor tolerance.	Lower the rotation speed. Reduce the load inertia. Reduce the frequency of dynamic brake use.
		Occurs when the power supply is turned ON.	Control panel error	Replace the Servo Driver.
A.74	Inrush resistance overload	Occurs when the main circuit power supply is turned ON.	The frequency by which main-circuit power supply is turned ON and OFF exceeds 5 times/min.	Reduce the frequency by which the main circuit power supply is turned ON and OFF.
		Occurs when the control circuit power supply only is turned ON.	Control panel error	Replace the Servo Driver.

上正科技有限公司
購買、維修 此手冊零組件
電話： 037-466333
Email: service@repairtw.com
Line id: @ace
www.repairtw.com

Display	Error	Status when error occurs	Cause of error	Countermeasures
A.7A	Overheat	Occurs when the control circuit power supply only is turned ON.	Control panel error	Replace the Servo Driver.
		Occurs during operation	Ambient Servo Driver temperature exceeds 55°C.	Lower the Servo Driver's ambient temperature to 55°C or less.
			Radiation shield sink air convection is poor.	Mount according to mounting conditions.
			The fan has stopped.	Replace the Servo Driver.
			Operating above rated output.	Lighten the load.
A.bF	System error	Occurs during operation.	Control panel error	Replace the Servo Driver.
			Power supply was turned OFF during parameter operations or the Parameter Unit was disconnected.	Initialize user parameters (Fn005) to reset the parameters.
			Automatic Servomotor current detection offset was adjusted (Fn00E) during pulse input.	Turn OFF the power supply, then ON again.
			Internal memory error	Replace the Servo Driver.
A.C1	Runaway detected	Occurs when there is a slight movement upon startup.	Encoder is wired incorrectly. Servomotor power line is wired incorrectly.	Correct the wiring.
			Servo turned ON when the Servomotor was rotated from the outside.	Adjust servo ON timing.
			Servo Driver is burned out.	Replace the Servo Driver.
A.C2	Phase error detected.	Occurs when there is a slight movement upon startup.	Encoder is wired incorrectly. Faulty Connector contact	Rewire correctly. Plug the Connector in securely.
		Occurs when the power supply is turned ON.	Encoder is burned out.	Replace the Servomotor.
			Servo Driver is burned out.	Replace the Servo Driver.
A.C3	Encoder disconnection detected.	Occurs when there is a slight movement upon startup.	Encoder wiring is disconnected or shorted. Faulty Connector contact.	Correct the disconnected or shorted part. Plug the Connector in securely.
			Encoder is wired incorrectly.	Rewire correctly.
			Encoder is burned out.	Replace the Servomotor.
			Servo Driver is burned out.	Replace the Servo Driver.
			Locked mechanically.	Repair the Servomotor shaft if it is locked.

上正科技有限公司
購買、維修 工業自動化產品
電話: 037-466333
Email: service@repairtw.com
Line id: 0933
www.repairtw.com

Display	Error	Status when error occurs	Cause of error	Countermeasures
A.d0	Deviation counter overflow	Servomotor will not rotate even when command pulses are input.	Servomotor power or encoder line is wired incorrectly.	Rewire correctly.
			Locked mechanically	Repair if the Servomotor shaft is locked
			Control panel error	Replace the Servo Driver.
		Occurs when rotating at high speed	Servomotor power or encoder line is miswired.	Rewire correctly.
		Occurs when long command pulses are sent	Gain adjustment is insufficient.	Adjust the gain.
			Acceleration and deceleration is too violent.	Lengthen acceleration and deceleration time. Use position command filter (Pn207.0, Pn204, and Pn208).
			Load is too large.	Lighten the load. Reselect the Servomotor.
			Pn505 (deviation counter overflow level) setting is too large.	Reset the parameter correctly.
			Resolution setting switch (switches 4 and 5) setting is too low.	Reset the switches correctly.
			Pn202 and Pn203 (electronic gear ratio) setting is too large.	Reset the parameters correctly.
CPF00	Parameter Unit transmission error 1	Occurs when power supply is turned ON.	Faulty Connector contact.	Plug the Connector in securely.
			Internal element malfunction.	Turn OFF the power supply, then ON again.
			Internal element is faulty.	Replace the Servo Driver. Replace the Parameter Unit.
CPF01	Parameter Unit transmission error 2	Occurs when Parameter Unit is in use.	Faulty Connector contact.	Plug the Connector in securely.
			Internal element malfunction	Turn OFF the power supply, then ON again.
			Internal element is faulty	Replace the Servo Driver. Replace the Parameter Unit.

上正科技有限公司
購買、維修 工控產品
電話： 03-466333
Email: service@repairtw.com
Line Id: @aaaz
www.repairtw.com

■ Parameter Unit Alarms

Display	Error	Status when error occurs	Cause of error	Countermeasures
OPERATOR ERR ROM CHECK ERR	ROM error	Occurs when power supply is turned ON.	Internal element malfunction.	Turn OFF the power supply, then ON again.
			Internal element is faulty.	Replace the Parameter Unit.
OPERATOR ERR RAM CHECK ERR	RAM error	Occurs during Parameter Unit use.	Internal element malfunction.	Turn OFF the power supply, then ON again.
			Internal element is faulty.	Replace the Parameter Unit.
OPERATOR ERR DATA SEND ERR	Send operation error	Occurs during Parameter Unit use.	Internal element malfunction.	Turn OFF the power supply, then ON again.
			Internal element is faulty.	Replace the Parameter Unit.

5-3-2 Troubleshooting by Means of Operating Status

Symptom	Probable cause	Items to check	Countermeasures
The power supply indicator (POWER) does not light even when the power supply is turned ON.	Power supply lines are incorrectly wired.	Check whether the control-circuit power supply input and main-circuit power supply input are within the power supply voltage ranges.	Correct the power supply.
		Check whether the control-circuit power supply input and main-circuit power supply input are wired correctly.	Rewire correctly.

上正科技有限公司
購買、維修、出租、回收設備
電話：037-466333
Email: service@repairtw.com
Line id: @zzzz
www.repairtw.com

Symptom	Probable cause	Items to check	Countermeasures
The Servomotor does not operate even when a command is given.	The RUN signal is OFF.	Check the RUN signal's ON and OFF operation.	Input the RUN signal. Correct the wiring.
	The deviation counter reset input (ECRST) is ON.	Check the ON/OFF status of the ECRST signal.	Turn OFF the ECRST signal. Correct the wiring.
		Pn200.1 (deviation counter reset) setting is incorrect.	Reset Pn200.1 to match the Controller.
	An error occurred with the RESET (alarm reset) signal ON.	Check the ON/OFF status of the RESET signal.	Turn the RESET signal OFF and take measures according to the alarm display.
	Function switch settings are incorrect.	Check function switch 6 (switch/parameter setting).	If using function switch 3 (command pulse input setting), turn OFF switch 6. If using parameter Pn200.0, turn ON switch 6.
	Function switch 3 (command pulse input) setting is incorrect. (When function switches are being used.)	Check the Controller's command pulse type and the Servo Driver's command pulse mode.	Set the mode to match the Controller's command pulse type.
	Pn200.0 (command pulse mode) setting is incorrect. (When parameter setting is being used.)	Check the Controller's command pulse type and the Servo Driver's command pulse mode.	Set the mode to match the Controller's command pulse type.
	Servomotor power lines are incorrectly wired.	Check Servomotor power lines.	Rewire correctly.
	Command pulse is incorrectly wired.	Check the command pulse wiring.	Rewire correctly.
		Check the command pulse voltage.	Connect a resistor matching the voltage.
The Servomotor operates momentarily, but then it does not operate.	The Servomotor power lines or encoder lines are wired incorrectly.	Check the Servomotor power line U, V, and W phases, and the encoder line wiring.	Correct the wiring.
	The command pulse is more than 250 kpps.	Check the Controller's command pulse frequency.	Reset the command pulse to 250 kpps max.
Servomotor operation is unstable.	The Servomotor power lines or encoder lines are wired incorrectly.	Check the Servomotor power line U, V, and W phases, and the encoder line wiring.	Correct the wiring.
	There are eccentricities or looseness in the coupling connecting the Servomotor shaft and the mechanical system, or there are load torque fluctuations according to how the pulley gears are engaging.	Check the machinery. Try operating the Servomotor without a load.	Adjust the machinery.
	Gain is wrong.	---	Use autotuning. Adjust the gain manually.

上巨科技有限公司
購買、維修 伺服系列零組件
電話： 037-466333
Email: service@repairtw.com
Line Id: @2222
www.repairtw.com

Symptom	Probable cause	Items to check	Countermeasures
Servomotor is overheating.	The ambient temperature is too high.	Check to be sure that the ambient temperature around the Servomotor is no higher than 40°C.	Lower the ambient temperature to 40°C or less. (Use a cooler or fan.)
	Servomotor installation area temperature is too high.	Check to be sure that the Servomotor installation area temperature is no higher than 40°C.	Lower the Servomotor installation area temperature.
	Ventilation is obstructed.	Check to see whether anything is blocking ventilation.	Ensure adequate ventilation.
	There is an overload.	Check the torque command value by means of monitor mode (Un002).	Lighten the load. Change to a larger capacity Servomotor and Servo Driver.
	The correspondence between the Servo Driver and the Servomotor is incorrect.	Check the models.	Combine models that correspond correctly.
There are unusual noises.	The machinery is vibrating.	Inspect the machinery to see whether there are any foreign objects in the movable parts, or whether there is any damage, deformation, or looseness.	Fix any problems causing vibration.
	Pn100 (speed loop gain) is insufficient.	--	Use online autotuning. Adjust the gain manually (speed loop gain).
Vibration is occurring at the same frequency as the applicable power supply.	Inductive noise is occurring.	Check to see whether the Servo Driver control signal lines are too long.	Shorten the control signal lines.
		Check to see whether control signal lines and power supply lines are too close to each other.	Separate control signal lines from power supply lines. Use a low-impedance power supply for control signals.

上揚科技有限公司
購買、維修 此手冊零組件
電話：
Email: service@repairtw.com
Line id: @zzzz
www.repairtw.com

5-4 Overload Characteristics (Electron Thermal Characteristics)

An overload protection (electron thermal) function is built into the Servo Driver to protect against Servo Driver or Servomotor overload. If an overload (A.70) does occur, first clear the cause of the error and then wait at least one minute for the Servomotor temperature to drop before turning on the power again. If the power is turned on again too soon, the Servomotor coil may be damaged.

Overload characteristics are shown in the following table. If, for example, a current of three times the Servomotor's rated current flows continuously, it will be detected after approximately five seconds.

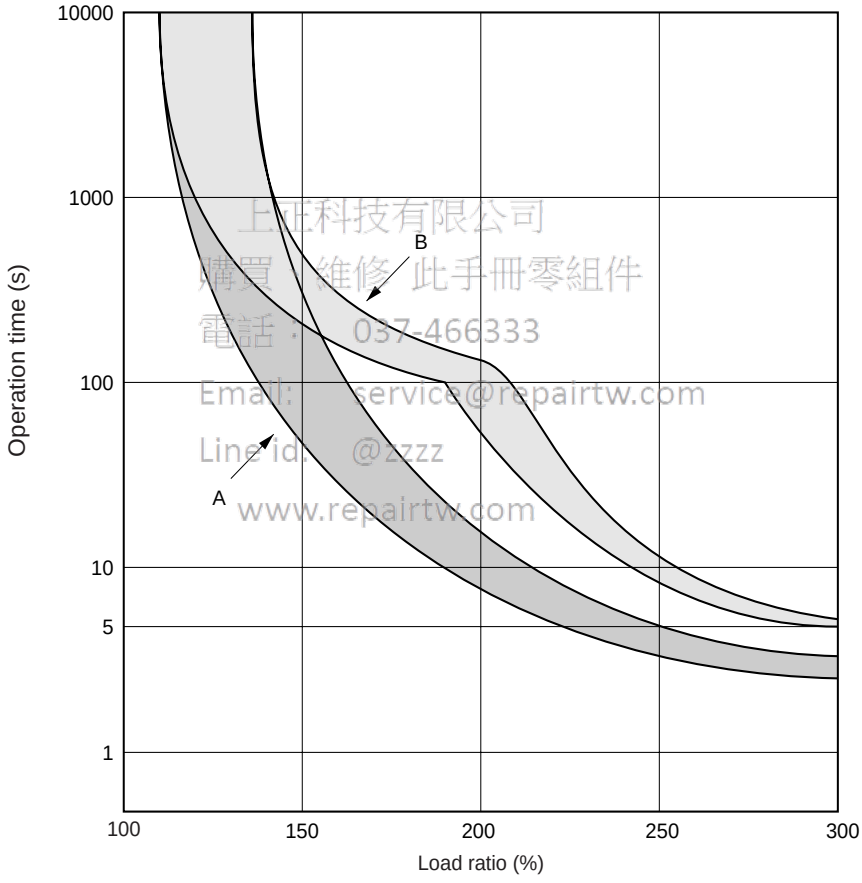

上正科技有限公司
購買、維修、此手冊零組件
電話： 037-466333
Email: service@repairtw.com
Line id: @zzzz
www.repairtw.com

A: Cylinder-style Servomotors: 30 to 400 W
Flat-style Servomotors: 100 to 400 W

B: Cylinder-style Servomotors: 750 W
Flat-style Servomotors: 750 W

Note 1. The load ratio is the ratio of the motor current to the rated motor current as a percentage.

$$\text{Load ratio (\%)} = \frac{\text{Motor current}}{\text{Rated motor current}} \times 100$$

Note 2. For example, if a current of three times the rated motor current flows continuously, an overload will be detected after approximately 5 seconds.

5-5 Periodic Maintenance

Maintenance and Inspection Precautions

⚠ **WARNING** Do not attempt to disassemble, repair, or modify any Units. Any attempt to do so may result in malfunction, fire, or electric shock.

⚠ **Caution** Resume operation only after transferring to the new Unit the contents of the data required for operation. Not doing so may result in an unexpected operation.

Servomotors and Servo Drivers contain many components and will operate properly only when each of the individual components is operating properly. Some of the electrical and mechanical components require maintenance depending on application conditions. In order to ensure proper long-term operation of Servomotors and Drivers, periodic inspection and part replacement is required according to the life of the components.

上正科技有限公司
購買、維修數位產品專業廠商
電話： 037-466333
Email: service@repairtw.com
Line Id: @zzzz
www.repairtw.com

The periodic maintenance cycle depends on the installation environment and application conditions of the Servomotor or Servo Driver. Recommended maintenance times are listed below for Servomotors and Servo Drivers. Use these for reference in determining actual maintenance schedules.

■ Servomotors

- Recommended Periodic Maintenance

Bearings:	20,000 hours
Reduction gear:	20,000 hours
Oil seal:	5,000 hours

  Application Conditions: Ambient Servomotor operating temperature of 40°C, within allowable shaft load, rated operation (rated torque and r/min), installed as described in operation manual.

- The radial loads during operation (rotation) on timing pulleys and other components contacting belts is twice the still load. Consult with the belt and pulley manufacturers and adjust designs and system settings so that the allowable shaft load is not exceeded even during operation. If a Servomotor is used under a shaft load exceeding the allowable limit, the Servomotor shaft can break, the bearings can burn out, and other problems can occur.
- When requesting repairs or investigations, separate them into Servomotors and reduction gears, and make separate requests for each product.

■ Servo Drivers

- Recommended Periodic Maintenance

  Aluminum analytical capacitors: 50,000 hours, at an ambient Servo Driver operating temperature of 40°C, 80% output of the rated operation (rated torque), installed as described in operation manual.

  Axle fan: 30,000 hours, at an ambient Servo Driver operating temperature of 40°C and an ambient humidity of 65%.

- When using the Servo Driver under the continuous operation mode, cool the Servo Driver with fans and air conditioners to maintain an ambient operating temperature below 40°C.
- The life of aluminum analytical capacitors is greatly affected by the ambient operating temperature. Generally speaking, an increase of 10°C in the ambient operating temperature will reduce capacitor life by 50%. We recommend that ambient operating temperature be lowered and the power supply time be reduced as much as possible to lengthen the maintenance times for Servo Drivers.
- If the Servomotor or Servo Driver is not to be used for a long time, or if they are to be used under conditions worse than those described above, a periodic inspection schedule of five years is recommended. Please consult with OMRON to determine whether or not components need to be replaced.

上正科技有限公司
購買、維修 此手冊零組件
電話： 037-466333
Email: service@repairtw.com
Line id: @zzzz
www.repairtw.com

上正科技有限公司
購買、維修 此手冊零組件
電話： 037-466333
Email: service@repairtw.com
Line id: @zzzz
www.repairtw.com

上正科技有限公司
購買、維修 此手冊零組件
電話： 037-466333
Email: service@repairtw.com
Line id: @777
www.repairtw.com

Chapter 6

Appendix

6-1 Connection Examples

6-1 Connection Examples

■ Connection Example 1: Connecting to SYSMAC CS1W-NC113/213/413 or C200HW-NC113/213/413 Position Control Units

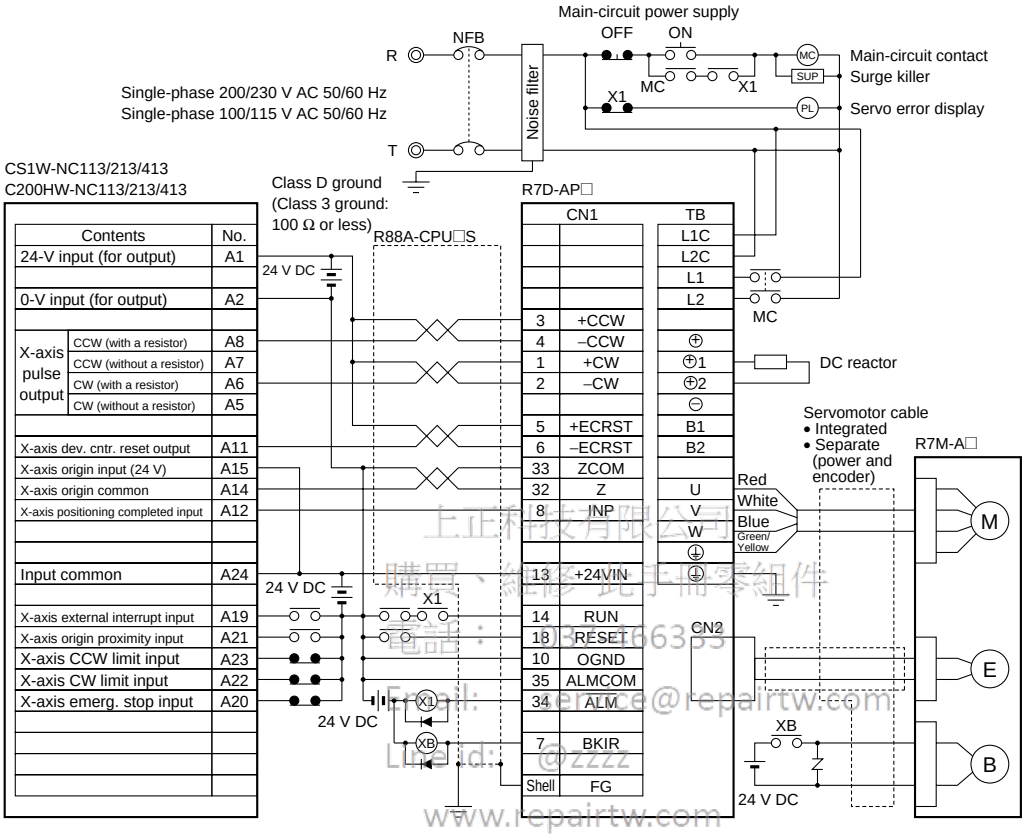

上正科技有限公司
購買、維修、進口用零組件
電話：886-4-2463353
Email: service@repairtw.com
Line id: @zzzz
www.repairtw.com

Note 1. Incorrect signal wiring can cause damage to Units and the Servo Driver.

Note 2. Leave unused signal lines open and do not wire them.

Note 3. Use mode 2 for origin search.

Note 4. Use the 24-V DC power supply for command pulse signals as a dedicated power supply.

Note 5. The diode recommended for surge absorption is the ERB44-02 (Fuji Electric) or equivalent.

Note 6. Do not use the 24-V DC brake power supply for the 24-V DC control power.

■ Connection Example 2: Connecting to SYSMAC CS1W-NC133/233/433

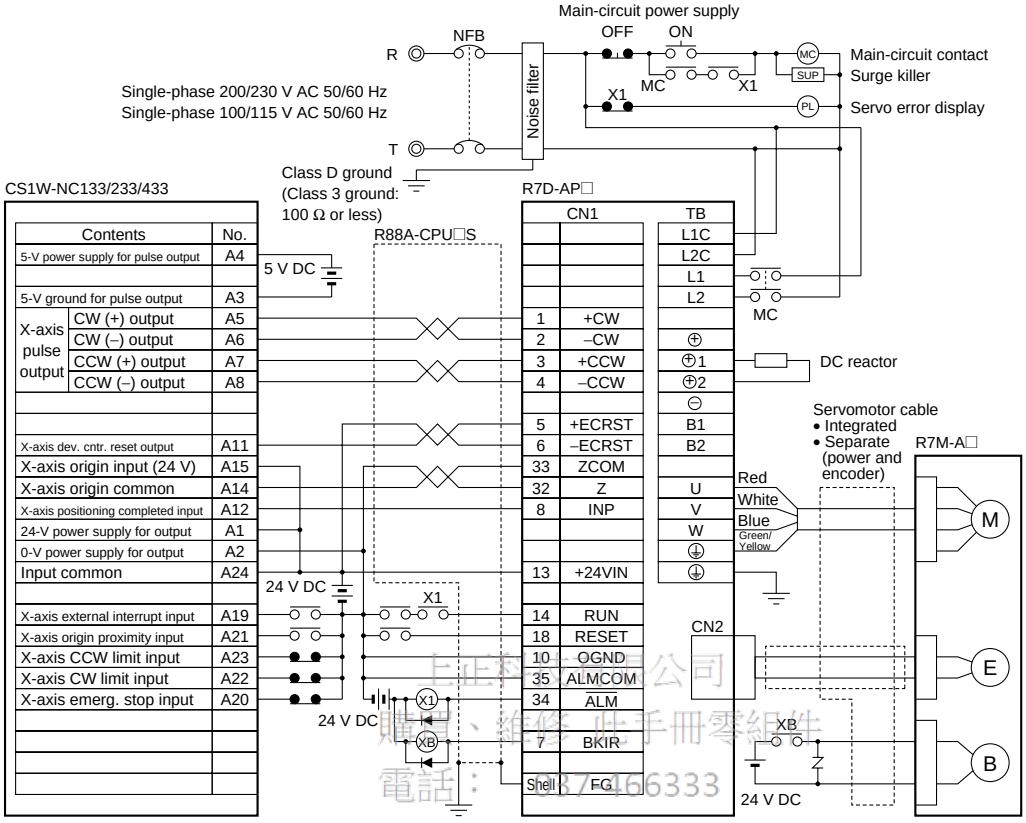

上正科技有限公司
購買、維修 此手冊零組件
電話： 887 66333
Email: service@repairtw.com
Line id: @777
www.repairtw.com

Note 1. Incorrect signal wiring can cause damage to Units and the Servo Driver.

Note 2. Leave unused signal lines open and do not wire them.

Note 3. Use mode 2 for origin search.

Note 4. Use the 5-V DC power supply for command pulse signals as a dedicated power supply.

Note 5. The diode recommended for surge absorption is the ERB44-02 (Fuji Electric) or equivalent.

Note 6. Do not use the 24-V DC brake power supply for the 24-V DC control power.

■ Connection Example 3: Connecting to SYSMAC CJ1W-NC113/213/413

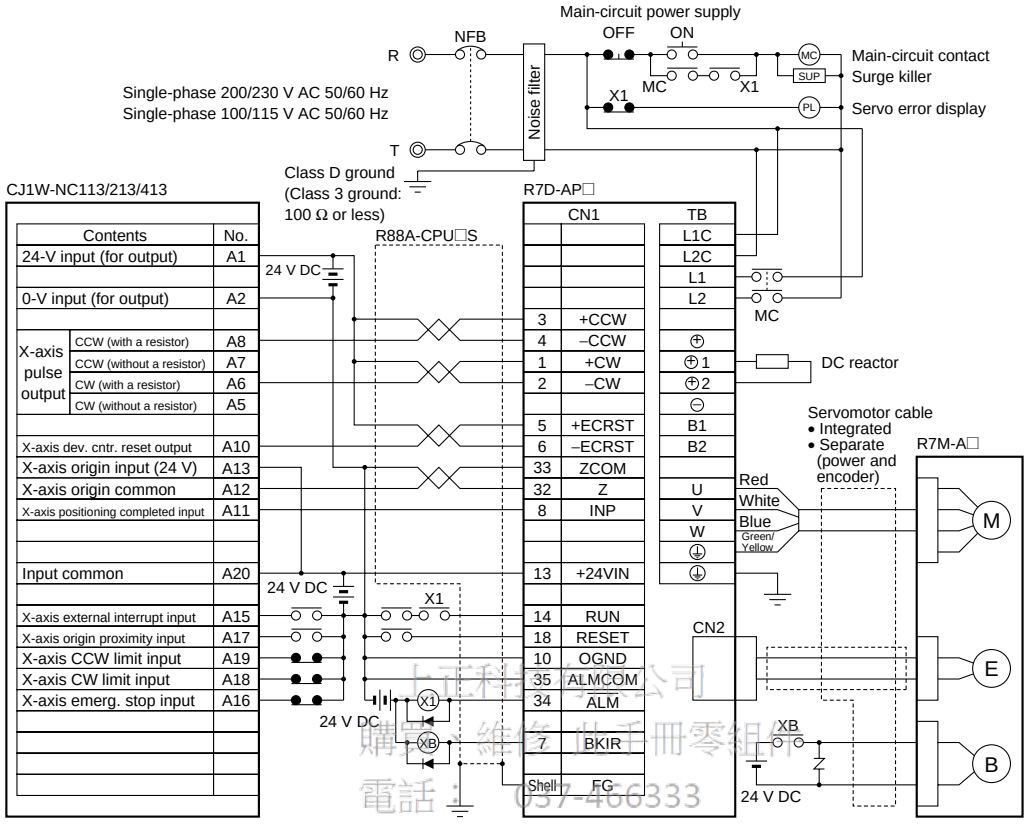

上正科技有限公司
購買、維修此手冊零組件
電話：037-466333
Email: service@repairtw.com
Line id: @222
www.repairtw.com

Note 1. Incorrect signal wiring can cause damage to Units and the Servo Driver.

Note 2. Leave unused signal lines open and do not wire them.

Note 3. Use mode 2 for origin search.

Note 4. Use the 24-V DC power supply for command pulse signals as a dedicated power supply.

Note 5. The diode recommended for surge absorption is the ERB44-02 (Fuji Electric) or equivalent.

Note 6. Do not use the 24-V DC brake power supply for the 24-V DC control power.

■ Connection Example 4: Connecting to SYSMAC CJ1W-NC133/233/433

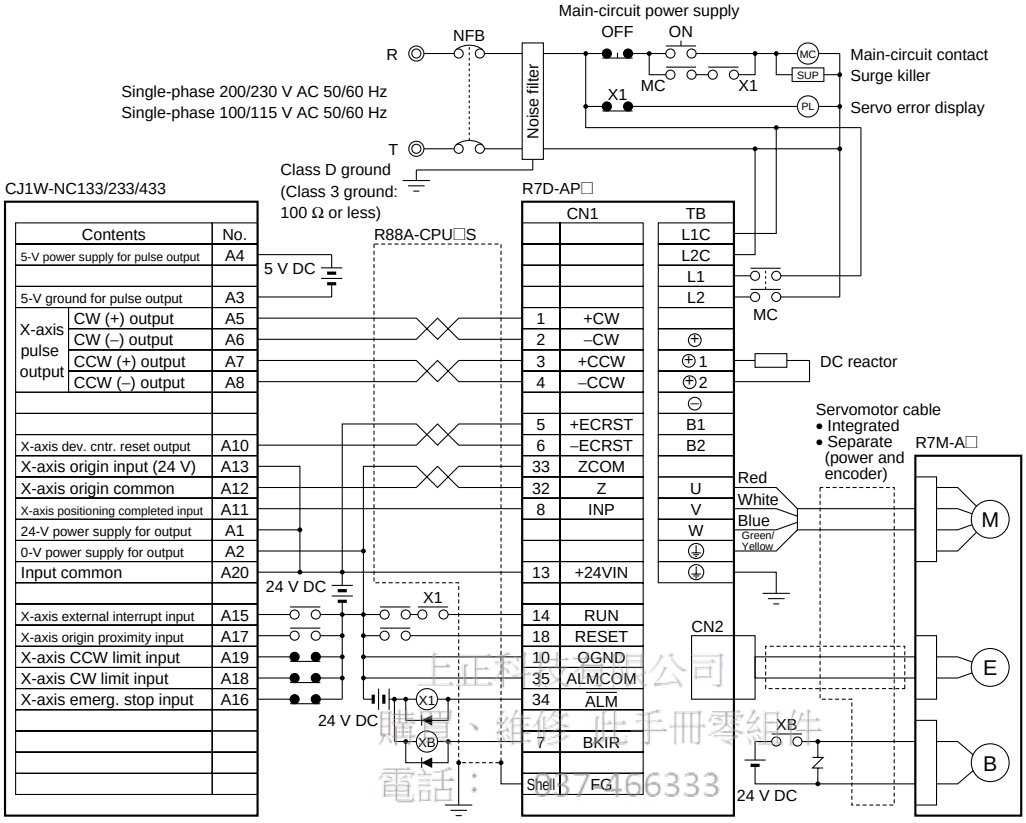

上正科技有限公司
購買、維修 此手冊零組件
電話： 887 166333
Email: service@repairtw.com
Line id: @777
www.repairtw.com

Note 1. Incorrect signal wiring can cause damage to Units and the Servo Driver.

Note 2. Leave unused signal lines open and do not wire them.

Note 3. Use mode 2 for origin search.

Note 4. Use the 5-V DC power supply for command pulse signals as a dedicated power supply.

Note 5. The diode recommended for surge absorption is the ERB44-02 (Fuji Electric) or equivalent.

Note 6. Do not use the 24-V DC brake power supply for the 24-V DC control power.

■ Connection Example 5: Connecting to SYSMAC CS1W-HCP22

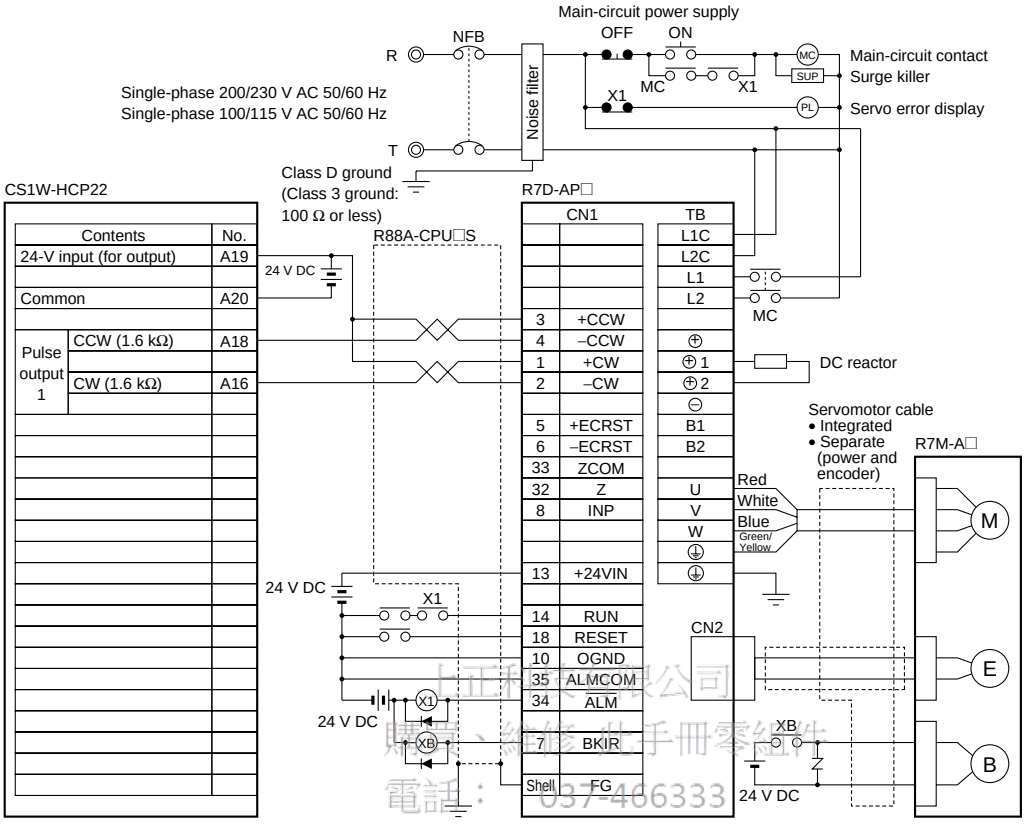

上証科技有限公司
購買、維修 儀手冊零組件
電話： 037-466333
Email: service@repairtw.com
Line Id: @2222
www.repairtw.com

Note 1. Incorrect signal wiring can cause damage to Units and the Servo Driver.

Note 2. Leave unused signal lines open and do not wire them.

Note 3. Use the 24-V DC power supply for command pulse signals as a dedicated power supply.

Note 4. The diode recommended for surge absorption is the ERB44-02 (Fuji Electric) or equivalent.

Note 5. Do not use the 24-V DC brake power supply for the 24-V DC control power.

■ Connection Example 6: Connecting to 3F88M-DRT141 Single-axis Positioner for DeviceNet

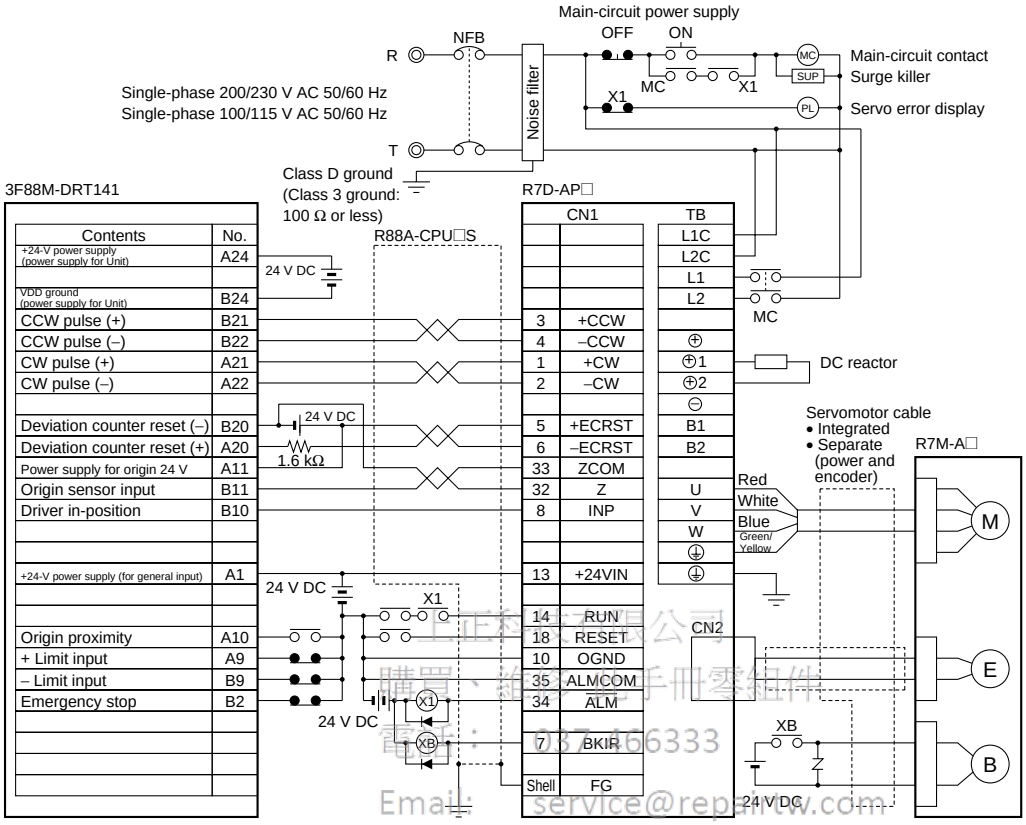

上正自動化有限公司
購買、維修、手冊零組件
電話：037-466333
Email: service@repairtw.com
Line id: @zzzz
www.repairtw.com

Note 1. Incorrect signal wiring can cause damage to Units and the Servo Driver.

Note 2. Leave unused signal lines open and do not wire them.

Note 3. The diode recommended for surge absorption is the ERB44-02 (Fuji Electric) or equivalent.

Note 4. Do not use the 24-V DC brake power supply for the 24-V DC control power.

Note 5. General-purpose I/O is one allocation example. The emergency stop and limit input contacts are NC and the driver in-position and origin proximity contacts are NO.

■ Connection Example 7: Connecting to SYSMAC C200H-NC112

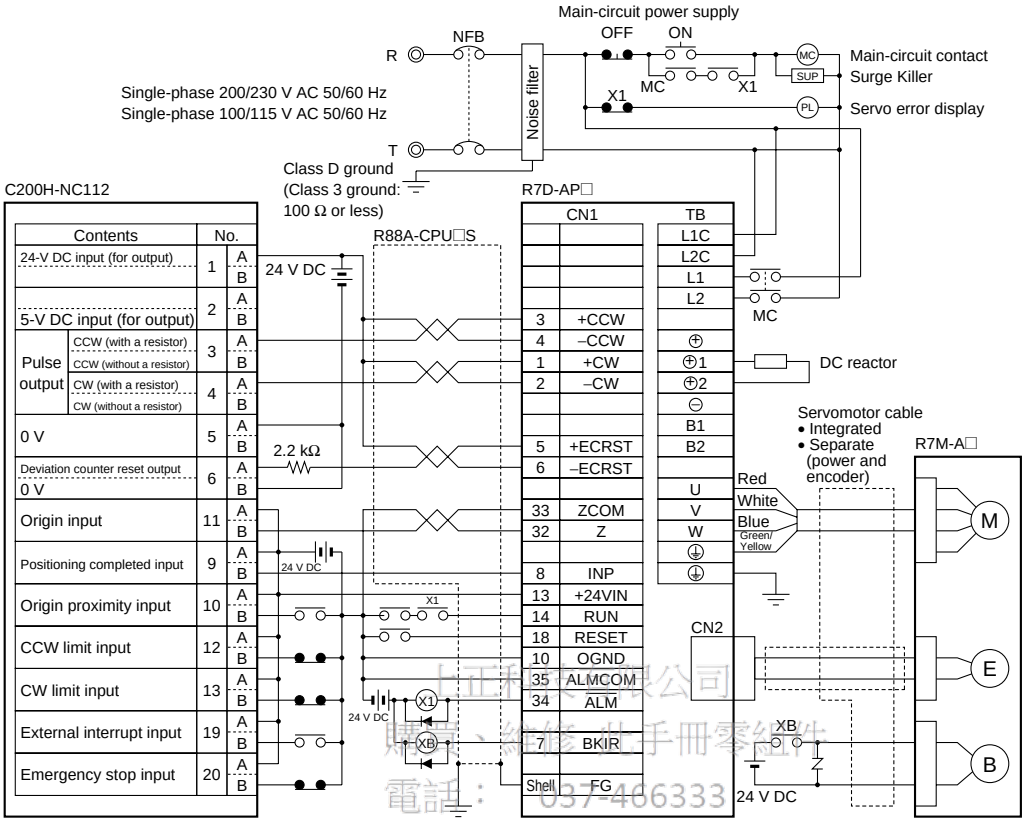

上証科技有限公司
購買、維修 儀器 手冊零組件
電話： 037-466333
Email: service@repairtw.com
Line ID: @222
www.repairtw.com

Note 1. Incorrect signal wiring can cause damage to Units and the Servo Driver.

Note 2. Leave unused signal lines open and do not wire them.

Note 3. Use mode 2 for origin search.

Note 4. Use the 24-V DC power supply for command pulse signals as a dedicated power supply.

Note 5. The diode recommended for surge absorption is the ERB44-02 (Fuji Electric) or equivalent.

Note 6. Do not use the 24-V DC brake power supply for the 24-V DC control power.

■ Connection Example 8: Connecting to SYSMAC C500-NC113/211 or C200H-NC211

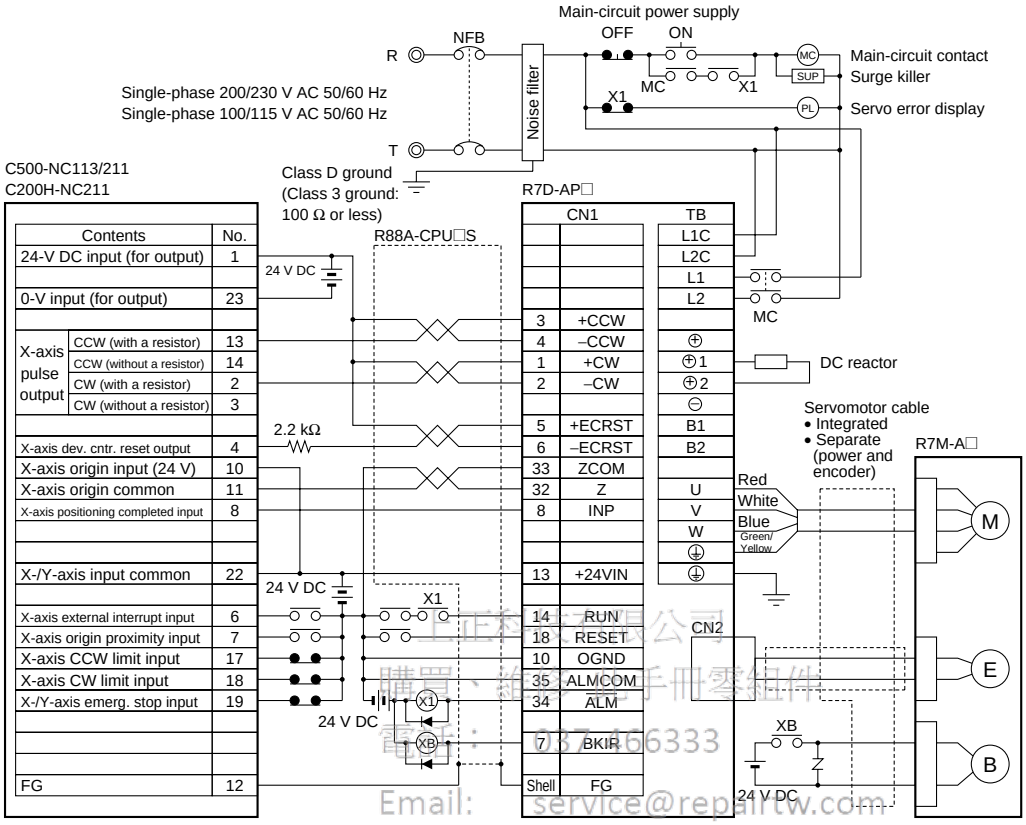

上正自動化有限公司
購買、維修、手冊零組件
電話：037-466333
Email: service@repairtw.com
Line id: @zzzz
www.repairtw.com

Note 1. Incorrect signal wiring can cause damage to Units and the Servo Driver.

Note 2. Leave unused signal lines open and do not wire them.

Note 3. Use mode 2 for origin search.

Note 4. Use the 24-V DC power supply for command pulse signals as a dedicated power supply.

Note 5. The diode recommended for surge absorption is the ERB44-02 (Fuji Electric) or equivalent.

Note 6. Do not use the 24-V DC brake power supply for the 24-V DC control power.

■ Connection Example 9: Connecting to Oriental XG8200S

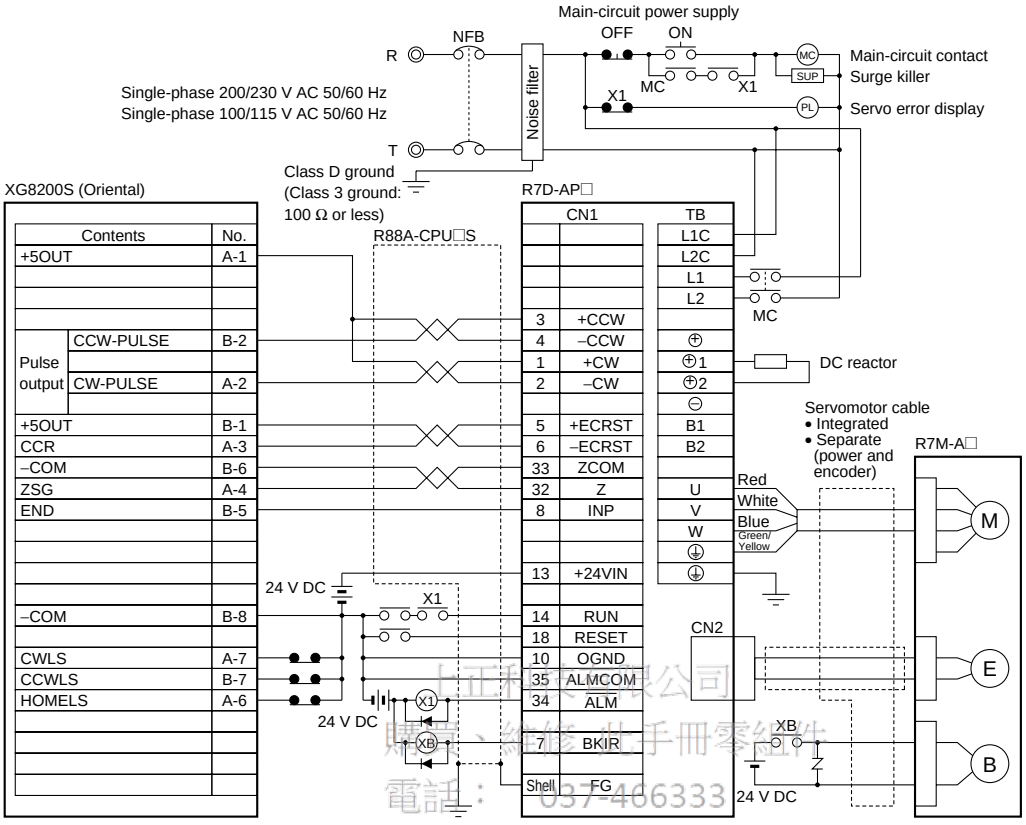

上証科技有限公司
購買、維修 儀手冊零組件
電話： 037-466333
Email: service@repairtw.com
Line Id: @2222
www.repairtw.com

Note 1. Incorrect signal wiring can cause damage to Units and the Servo Driver.

Note 2. Leave unused signal lines open and do not wire them.

Note 3. The diode recommended for surge absorption is the ERB44-02 (Fuji Electric) or equivalent.

Note 4. Do not use the 24-V DC brake power supply for the 24-V DC control power.

■ Connection Example 10: Connecting to Oriental SG8030J

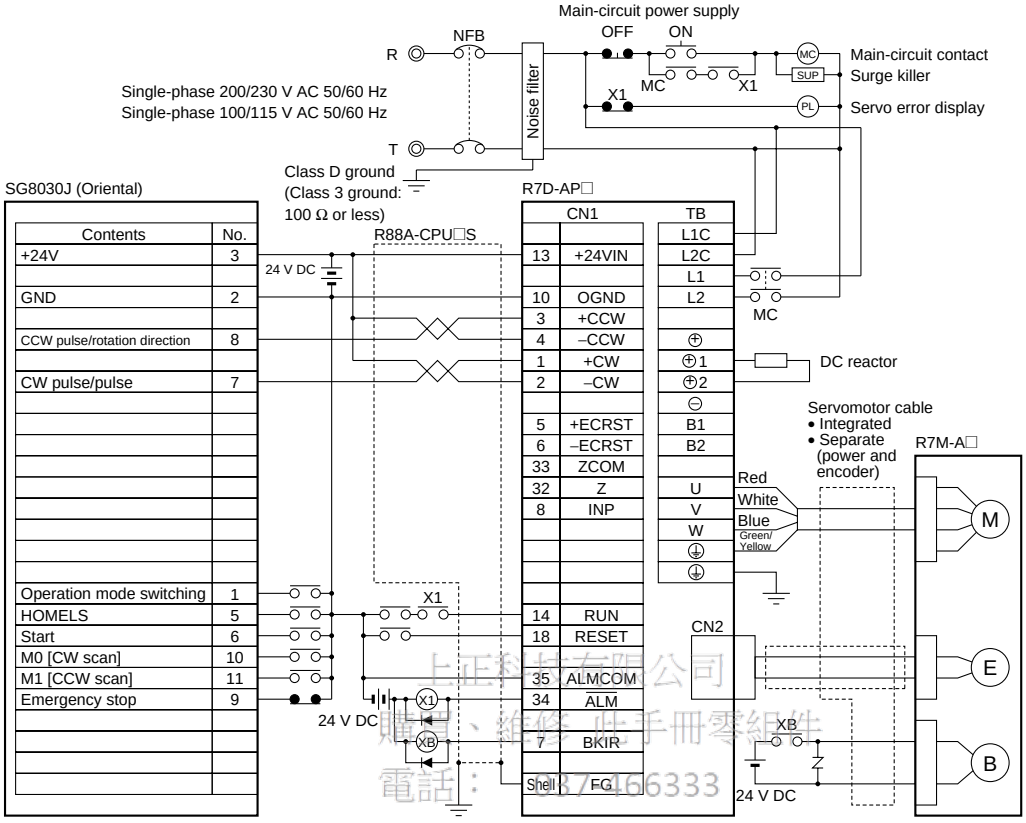

上正科技有限公司
購買、維修 此手冊零組件
電話： 887 166333
Email: service@repairtw.com
Line id: @777
www.repairtw.com

Note 1. Incorrect signal wiring can cause damage to Units and the Servo Driver.

Note 2. Leave unused signal lines open and do not wire them.

Note 3. The diode recommended for surge absorption is the ERB44-02 (Fuji Electric) or equivalent.

Note 4. Do not use the 24-V DC brake power supply for the 24-V DC control power.

■ Connection Example 11: Connecting to Keyence HC-50

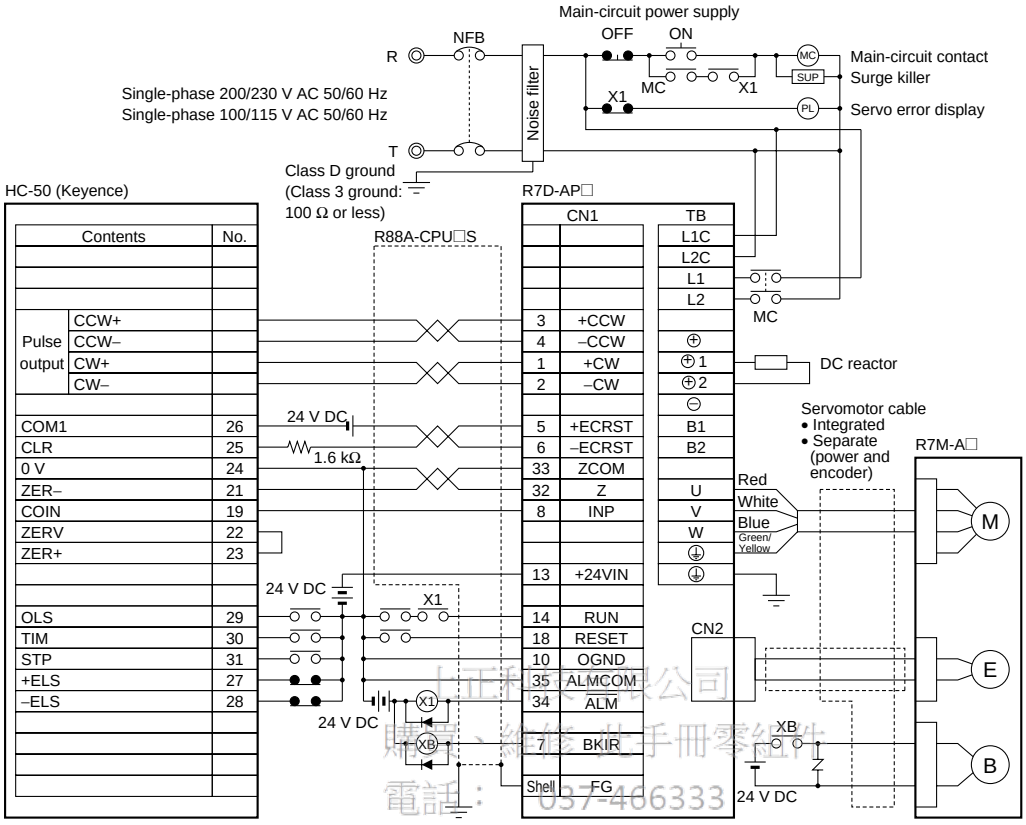

上正科技有限公司
購買、維修、此手冊零組件
電話： 037-466333
Email: service@repairtw.com
Line ID: @222
www.repairtw.com

Note 1. Incorrect signal wiring can cause damage to Units and the Servo Driver.

Note 2. Leave unused signal lines open and do not wire them.

Note 3. The diode recommended for surge absorption is the ERB44-02 (Fuji Electric) or equivalent.

Note 4. Do not use the 24-V DC brake power supply for the 24-V DC control power.

■ Connection Example 12: Connecting to Melec C-870V1

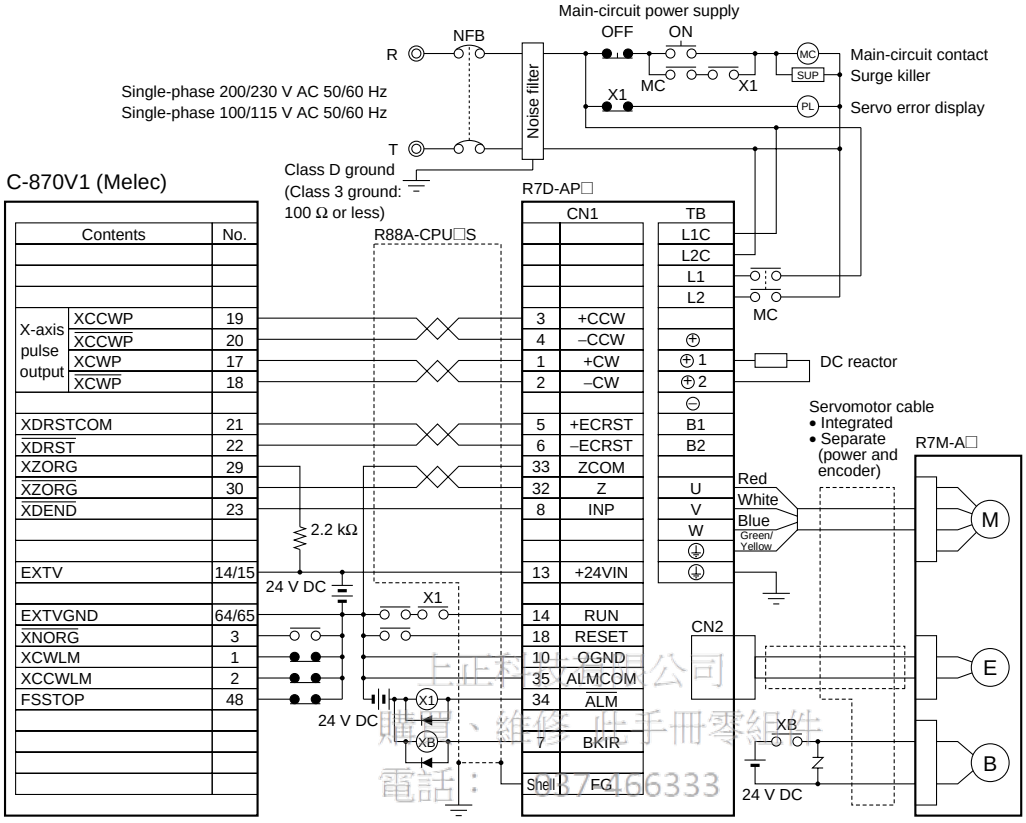

上正科技有限公司
購買、維修 此手冊零組件
電話： 887 66333
Email: service@repairtw.com
Line id: @777
www.repairtw.com

Note 1. Incorrect signal wiring can cause damage to Units and the Servo Driver.

Note 2. Leave unused signal lines open and do not wire them.

Note 3. The diode recommended for surge absorption is the ERB44-02 (Fuji Electric) or equivalent.

Note 4. Do not use the 24-V DC brake power supply for the 24-V DC control power.

Note 5. Do not use $\overline{\text{XDRST}}$ as a general-purpose output.

■ Connection Example 13: Connecting to SYSMAC CQM1H-PLB21

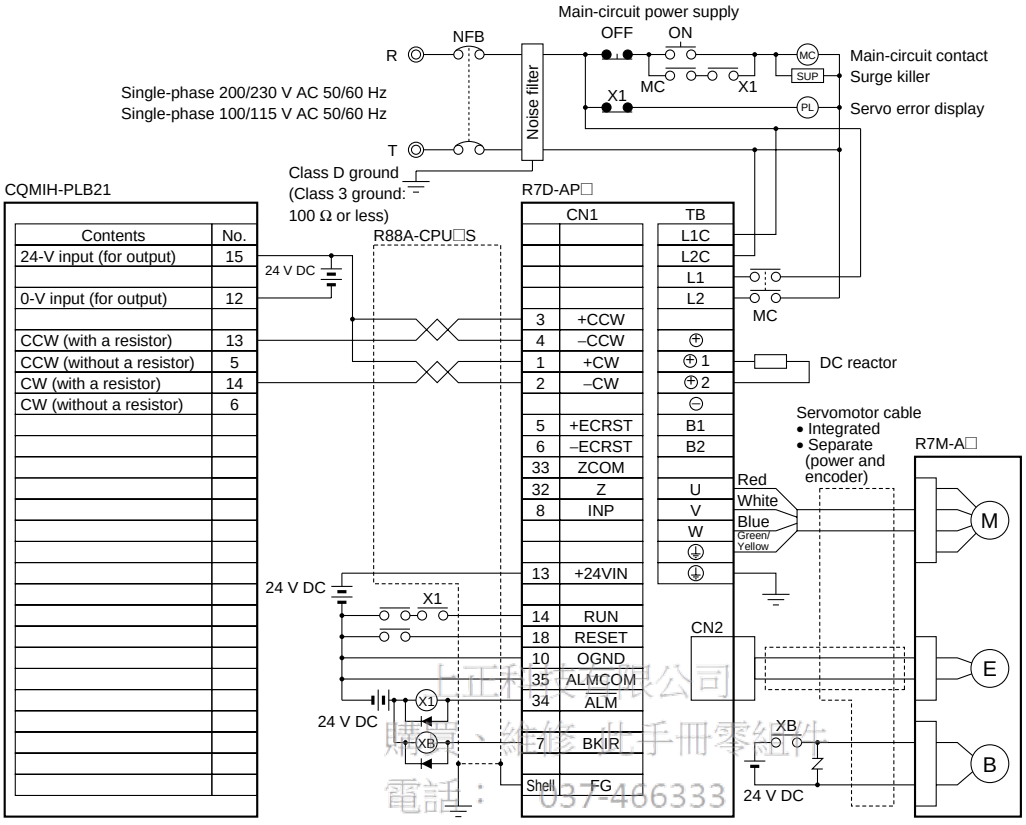

上証科技有限公司
購買、維修 儀手冊零組件
電話： 037-466333
Email: service@repairtw.com
Line Id: @2222
www.repairtw.com

Note 1. Incorrect signal wiring can cause damage to Units and the Servo Driver.

Note 2. Leave unused signal lines open and do not wire them.

Note 3. Use the 24-V DC power supply for command pulse signals as a dedicated power supply.

Note 4. The diode recommended for surge absorption is the ERB44-02 (Fuji Electric) or equivalent.

Note 5. Do not use the 24-V DC brake power supply for the 24-V DC control power.

■ Connection Example 14: Connecting to SYSMAC CPM2C

This diagram shows an example using a 10-point CPU Unit with transistor outputs (sinking).

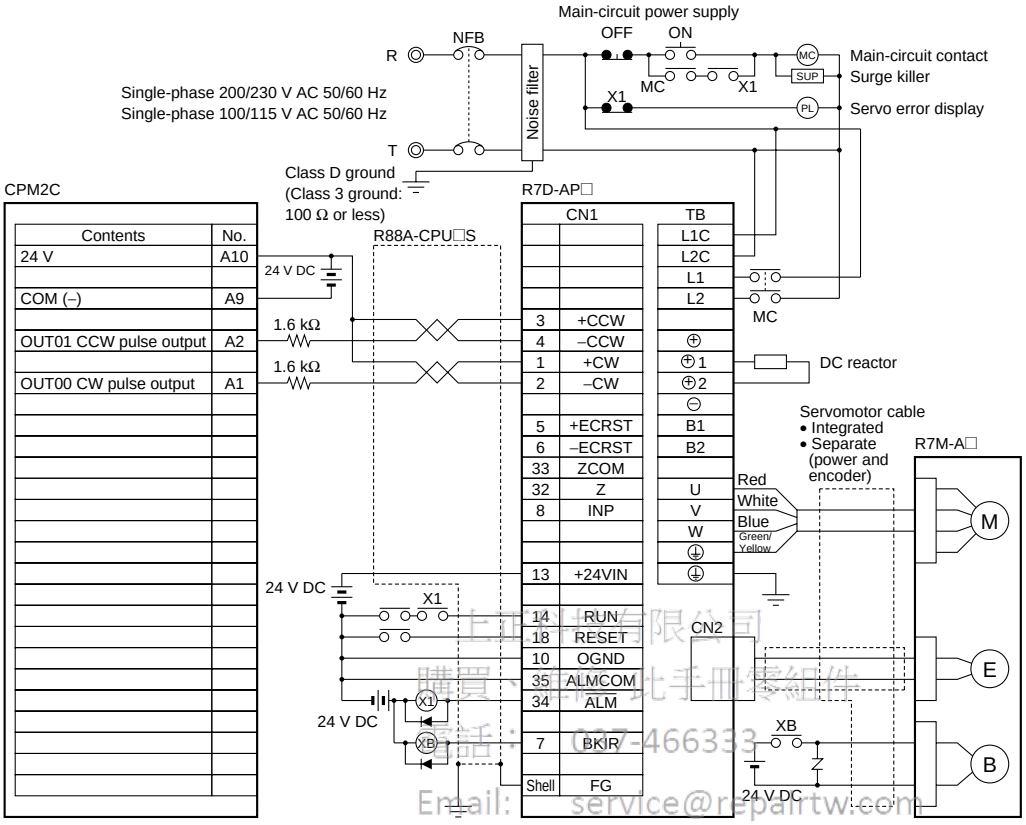

Note 1. Incorrect signal wiring can cause damage to Units and the Servo Driver.

Note 2. Leave unused signal lines open and do not wire them.

Note 3. Use the 24-V DC power supply for command pulse signals as a dedicated power supply.

Note 4. The diode recommended for surge absorption is the ERB44-02 (Fuji Electric) or equivalent.

Note 5. Do not use the 24-V DC brake power supply for the 24-V DC control power.

上正科技有限公司
購買、維修、光手冊零組件
電話：037-466333
Email: service@repairtw.com
Line id: @rpair
www.repairtw.com

上正科技有限公司
購買、維修 此手冊零組件
電話： 037-466333
Email: service@repairtw.com
Line id: @zzzz
www.repairtw.com

Revision History

A manual revision code appears as a suffix to the catalog number on the front cover of the manual.

Cat. No. I533-E1-04

Revision code

The following table outlines the changes made to the manual during each revision. Page numbers refer to the previous version.

Revision code	Date	Revised content
01	November 2001	Original production
02	July 2005	Following changes made to front matter. General precautionary notes added to the first page. **Items to Check Before Unpacking**: Moved to the first page. **Notice**: Information on general precautions notation added. **Read and Understand this Manual**: Information on liability and warranty added. Page 3-40: Wattage values corrected in note (changed 70 W to 30 W, 200 W to 75 W, and 300 W to 100 W).
03	October 2007	**Pages 1-7 and 1-8:** Diagrams changed. **Page 2-4:** Following models added: XW2B-20J6-8A, XW2B-40J6-9A, XW2B-80J7-1A, XW2Z-100J-B10, XW2Z-200J-B10, XW2Z-100J-B12, XW2Z-200J-B12, XW2Z-100J-A26, XW2Z-050J-A28, XW2Z-100J-A28, XW2Z-050J-A29, XW2Z-100J-A29, XW2Z-050J-A30, XW2Z-100J-A30, XW2Z-050J-A32, XW2Z-100J-A32, and Separate Servomotor Cables. **Pages 2-12 to 2-15:** Diagrams corrected (including adding set bolt diagrams), dimensions corrected, and set bolt (AT) dimensions added. **Pages 2-31 and 2-34:** Applicable load inertia row deleted. **Pages 2-38 to 2-41:** Reduction gear inertias corrected. **Page 2-45:** First paragraph replaced and expanded. Following heading changed. **Page 2-47:** Section added. **Page 2-56, 2-58, and 2-81:** Sections added. **Page 3-6:** CJ1M-CPU21/22/23 and FQM1-MMP21/22 added and motor cable part of diagram changed. **Pages 3-9 and 3-10:** Models added to ends of table. **Page 3-11:** Servomotor Cable section rewritten. **Pages 3-12 and 3-13:** Parts of diagrams including L1, L2, L3, L1C, and L2C corrected. **Page 3-17:** Callout added to bottom diagram. **Page 3-19:** Bulleted paragraph added. **Page 3-20:** Bottom table replaced. **Page 3-30:** Sentence starting “for 200-VAC systems” deleted. **Page 4-24:** Bulleted paragraph added at bottom of page. **Page 4-27:** Sentence starting “first stop the Servomotor” deleted. **Page 5-15:** Text beneath diagram changed. **Pages 6-2 to 6-15:** Information on Servomotor cables changed in diagram.
04	June 2008	**Page 2-52**: Changed diameter in top table. **Page 2-114**: Changed right side of figure. **Page 5-15**: Changed text under graph.

中山台灣公司
購買、維修、此手冊零組件
電話：886-2-2922-9178
Email: service@repairtw.com
Line ID: @0224
www.repairtw.com

上正科技有限公司
購買、維修 此手冊零組件
電話： 037-466333
Email: service@repairtw.com
Line id: @zzzz
www.repairtw.com

上正科技有限公司
購買、維修 此手冊零組件
電話： 037-466333
Email: service@repairtw.com
Line id: @zzzz
www.repairtw.com

OMRON Corporation
Industrial Automation Company
Control Devices Division H.Q.
Motion Control Department
Shiokoji Horikawa, Shimogyo-ku,
Kyoto, 600-8530 Japan
Tel: (81) 75-344-7173/Fax: (81) 75-344-7149

2-2-1 Nishikusatsu, Kusatsu-shi,
Shiga, 525-0035 Japan
Tel: (81) 77-565-5223/Fax: (81) 77-565-5568

Regional Headquarters
OMRON EUROPE B.V.
Wegalaan 67-69-2132 JD Hoofddorp
The Netherlands
Tel: (31)2356-81-300/Fax: (31)2356-81-388

OMRON ELECTRONICS LLC
One Commerce Drive Schaumburg,
IL 60173-5302 U.S.A.
Tel: (1) 847-843-7900/Fax: (1) 847-843-7787

OMRON ASIA PACIFIC PTE. LTD.
No. 438A Alexandra Road # 05-05/08 (Lobby 2),
Alexandra Technopark, Singapore 119967
Tel: (65) 6835-3011/Fax: (65) 6835-2711

OMRON (CHINA) CO., LTD.
Room 2211, Bank of China Tower,
200 Yin Cheng Zhong Road,
PuDong New Area, Shanghai, 200120, China
Tel: (86) 21-5037-2222/Fax: (86) 21-5037-2200

Authorized Distributor:

© OMRON Corporation 2001 All Rights Reserved.
In the interest of product improvement,
specifications are subject to change without notice.

Printed in Japan
OMRON Industrial Automation Global: **www.ia.omron.com**
Cat. No. I533-E1-04
0608